Service

Marine Generator Sets

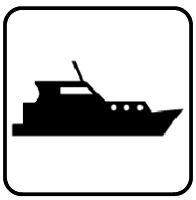

Models:

5EOZ
8EOZ
9EOZ
10EOZ
4EFOZ
6.5EFOZ
8EFOZ
9EFOZ

ISO 9001
KOHLER POWER SYSTEMS
NATIONALLY REGISTERED

KOHLER®
POWER SYSTEMS

TP-6053 7/04a

Safety Precautions and Instructions ..... **I**

Introduction ..... **i**

Service Assistance ..... **i**

Section 1 Specifications **1**
1.1 General 1
1.2 Service Views 2
1.3 Engine 5
1.4 Generator 6

Section 2 Scheduled Maintenance **7**
2.1 General 7
2.2 Lubrication System 7
2.3 Battery 8
2.4 Generator Storage 9

Section 3 Intake and Exhaust System **11**
3.1 Air Intake Silencer/Filter 11
3.2 Exhaust System 11
3.3 Mixing Elbow 11

Section 4 Fuel System **13**
4.1 General 13
4.2 Fuel Specifications 13
4.3 Fuel Filter 13
4.4 Bleed the Fuel System 14
4.5 Fuel Solenoid 15
4.6 Fuel Pump 16
4.7 Governor 17

Section 5 Cooling System **19**
5.1 General 19
5.2 Water-Cooled Exhaust Manifold 20
5.3 Closed Heat Exchanger 20
5.4 Fill Check and Coolant 20
5.5 Flush and Clean Cooling System 20
5.6 Pressure Cap 21
5.7 Impeller Inspection and Replacement 21
5.8 Belt Tension 22
5.9 Siphon Break 23
5.10 Anticorrosion Zinc Anode 24

Section 6 Controller Troubleshooting **25**
6.1 General 25
6.2 Controller Sequence of Operation 25
6.2.1 Start 25
6.2.2 Run 25
6.2.3 Stop 26
6.3 Engine Safety Shutdown Switches 26
6.3.1 Low Oil Pressure (LOP) Shutdown 26
6.3.2 High Water Temperature and High Exhaust Temperature Shutdown Switch 26
6.4 Controller Circuit Board 27
6.5 Troubleshooting 28

Section 7 Generator Troubleshooting **33**
7.1 General 33
7.2 General Troubleshooting 33
7.3 Separate Excitation 34
7.4 PowerBoost IIIE Voltage Regulators 34
7.4.1 Voltage Regulator Test 35
7.4.2 Voltage Regulator Adjustment 35
7.5 Exciter Field 36
7.6 Exciter Armature 37
7.7 Rectifier Module 38
7.8 Rotor 38
7.9 Stator 39

Section 8 Component Troubleshooting **41**
8.1 General 41
8.2 Remote Panels (Optional) 43

Section 9 Generator Disassembly/ Reassembly **45**
9.1 Disassembly 45
9.2 Reassembly 47

Section 10 Voltage Reconnection and Wiring Diagrams **51**
10.1 Voltage Reconnection 51
10.1.1 100–120-Volt Configurations 51
10.1.2 100–120/200–240-Volt Configurations 52
10.1.3 200–240-Volt Configurations 52
10.2 Marine Manual (Ship-to-Shore) Transfer Switch 53
10.3 Wiring Diagram, Schematic 54
10.4 Wiring Diagram, Point-to-Point 55
10.5 Remote Start Panel 56
10.6 Remote Start and 2-Meter Panel 56
10.7 Remote Start and 4-Meter Panel 57

Appendix A Abbreviations **A-1**

Appendix B Common Hardware Application Guidelines **A-3**

Appendix C General Torque Specifications **A-4**

Appendix D Common Hardware Identification **A-5**

Appendix E Common Hardware List **A-6**

IMPORTANT SAFETY INSTRUCTIONS. Electromechanical equipment, including generator sets, transfer switches, switchgear, and accessories, can cause bodily harm and pose life-threatening danger when improperly installed, operated, or maintained. To prevent accidents be aware of potential dangers and act safely. Read and follow all safety precautions and instructions. SAVE THESE INSTRUCTIONS.

This manual has several types of safety precautions and instructions: Danger, Warning, Caution, and Notice.

DANGER

Danger indicates the presence of a hazard that ***will cause severe personal injury, death***, or ***substantial property damage***.

WARNING

Warning indicates the presence of a hazard that ***can cause severe personal injury, death,*** or ***substantial property damage***.

CAUTION

Caution indicates the presence of a hazard that ***will*** or ***can cause minor personal injury*** or ***property damage***.

NOTICE

Notice communicates installation, operation, or maintenance information that is safety related but not hazard related.

Safety decals affixed to the equipment in prominent places alert the operator or service technician to potential hazards and explain how to act safely. The decals are shown throughout this publication to improve operator recognition. Replace missing or damaged decals.

Accidental Starting

WARNING

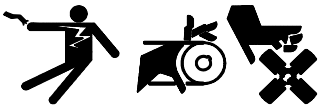

Accidental starting.
Can cause severe injury or death.

Disconnect the battery cables before working on the generator set. Remove the negative (–) lead first when disconnecting the battery. Reconnect the negative (–) lead last when reconnecting the battery.

Disabling the generator set. Accidental starting can cause severe injury or death. Before working on the generator set or equipment connected to the set, disable the generator set as follows: (1) Place the generator set start/stop switch in the STOP position. (2) Disconnect the power to the battery charger, if equipped. (3) Remove the battery cables, negative (–) lead first. Reconnect the negative (–) lead last when reconnecting the battery. Follow these precautions to prevent the starting of the generator set by the remote start/stop switch.

Battery

WARNING

Sulfuric acid in batteries.
Can cause severe injury or death.

Wear protective goggles and clothing. Battery acid may cause blindness and burn skin.

Battery electrolyte is a diluted sulfuric acid. Battery acid can cause severe injury or death. Battery acid can cause blindness and burn skin. Always wear splashproof safety goggles, rubber gloves, and boots when servicing the battery. Do not open a sealed battery or mutilate the battery case. If battery acid splashes in the eyes or on the skin, immediately flush the affected area for 15 minutes with large quantities of clean water. Seek immediate medical aid in the case of eye contact. Never add acid to a battery after placing the battery in service, as this may result in hazardous spattering of battery acid.

Battery acid cleanup. Battery acid can cause severe injury or death. Battery acid is electrically conductive and corrosive. Add 500 g (1 lb.) of bicarbonate of soda (baking soda) to a container with 4 L (1 gal.) of water and mix the neutralizing solution. Pour the neutralizing solution on the spilled battery acid and continue to add the neutralizing solution to the spilled battery acid until all evidence of a chemical reaction (foaming) has ceased. Flush the resulting liquid with water and dry the area.

Battery gases. Explosion can cause severe injury or death. Battery gases can cause an explosion. Do not smoke or permit flames or sparks to occur near a battery at any time, particularly when it is charging. Do not dispose of a battery in a fire. To prevent burns and sparks that could cause an explosion, avoid touching the battery terminals with tools or other metal objects. Remove all jewelry before servicing the equipment. Discharge static electricity from your body before touching batteries by first touching a grounded metal surface away from the battery. To avoid sparks, do not disturb the battery charger connections while the battery is charging. Always turn the battery charger off before disconnecting the battery connections. Ventilate the compartments containing batteries to prevent accumulation of explosive gases.

and/or equipment damage. Disconnect the battery before generator set installation or maintenance. Remove all jewelry before servicing the equipment. Use tools with insulated handles. Remove the negative (–) lead first when disconnecting the battery. Reconnect the negative (–) lead last when reconnecting the battery. Never connect the negative (–) battery cable to the positive (+) connection terminal of the starter solenoid. Do not test the battery condition by shorting the terminals together.

Engine Backfire/Flash Fire

⚠ WARNING

Fire.
Can cause severe injury or death.

Do not smoke or permit flames or sparks near fuels or the fuel system.

Servicing the air cleaner. A sudden backfire can cause severe injury or death. Do not operate the generator set with the air cleaner/silencer removed.

Combustible materials. A sudden flash fire can cause severe injury or death. Do not smoke or permit flames or sparks near the fuel system. Keep the compartment and the generator set clean and free of debris to minimize the risk of fire. Wipe up spilled fuels and engine oil.

vapors are flammable and explosive. Handle these materials carefully to minimize the risk of fire or explosion. Equip the compartment or nearby area with a fully charged fire extinguisher. Select a fire extinguisher rated ABC or BC for electrical fires or as recommended by the local fire code or an authorized agency. Train all personnel on fire extinguisher operation and fire prevention procedures.

Exhaust System

⚠ WARNING

Carbon monoxide.
Can cause severe nausea, fainting, or death.

The exhaust system must be leakproof and routinely inspected.

Carbon monoxide symptoms. Carbon monoxide can cause severe nausea, fainting, or death. Carbon monoxide is a poisonous gas present in exhaust gases. Carbon monoxide poisoning symptoms include but are not limited to the following:

- Light-headedness, dizziness
- Physical fatigue, weakness in joints and muscles
- Sleepiness, mental fatigue, inability to concentrate or speak clearly, blurred vision
- Stomachache, vomiting, nausea

If experiencing any of these symptoms and carbon monoxide poisoning is possible, seek fresh air immediately and remain active. Do not sit, lie down, or fall asleep. Alert others to the possibility of carbon monoxide poisoning. Seek medical attention if the condition of affected persons does not improve within minutes of breathing fresh air.

use copper tubing in diesel exhaust systems. Sulfur in diesel exhaust causes rapid deterioration of copper tubing exhaust systems, resulting in exhaust/water leakage.

Inspecting the exhaust system. Carbon monoxide can cause severe nausea, fainting, or death. For the safety of the craft's occupants, install a carbon monoxide detector. Consult the boat builder or dealer for approved detector location and installation. Inspect the detector before each generator set use. In addition to routine exhaust system inspection, test the carbon monoxide detector per the manufacturer's instructions and keep the detector operational at all times.

Operating the generator set. Carbon monoxide can cause severe nausea, fainting, or death. Carbon monoxide is an odorless, colorless, tasteless, nonirritating gas that can cause death if inhaled for even a short time. Use the following precautions when installing and operating the generator set. Do not install the exhaust outlet where exhaust can be drawn in through portholes, vents, or air conditioners. If the generator set exhaust discharge outlet is near the waterline, water could enter the exhaust discharge outlet and close or restrict the flow of exhaust. Never operate the generator set without a functioning carbon monoxide detector. Be especially careful if operating the generator set when moored or anchored under calm conditions because gases may accumulate. If operating the generator set dockside, moor the craft so that the exhaust discharges on the lee side (the side sheltered from the wind). Always be aware of others, making sure your exhaust is directed away from other boats and buildings. Avoid overloading the craft.

⚠ WARNING

Explosive fuel vapors.
Can cause severe injury or death.

Use extreme care when handling, storing, and using fuels.

Draining the fuel system. Explosive fuel vapors can cause severe injury or death. Spilled fuel can cause an explosion. Use a container to catch fuel when draining the fuel system. Wipe up spilled fuel after draining the system.

Installing the fuel system. Explosive fuel vapors can cause severe injury or death. Fuel leakage can cause an explosion. Do not modify the tank or the propulsion engine fuel system. Equip the craft with a tank that allows one of the two pickup arrangements described in the installation section. The tank and installation must conform to USCG Regulations.

The fuel system. Explosive fuel vapors can cause severe injury or death. Vaporized fuels are highly explosive. Use extreme care when handling and storing fuels. Store fuels in a well-ventilated area away from spark-producing equipment and out of the reach of children. Never add fuel to the tank while the engine is running because spilled fuel may ignite on contact with hot parts or from sparks. Do not smoke or permit flames or sparks to occur near sources of spilled fuel or fuel vapors. Keep the fuel lines and connections tight and in good condition. Do not replace flexible fuel lines with rigid lines. Use flexible sections to avoid fuel line breakage caused by vibration. Do not operate the generator set in the presence of fuel leaks, fuel accumulation, or sparks. Repair fuel systems before resuming generator set operation.

Use pipe sealant on all threaded fittings to prevent fuel leakage. Use pipe sealant that resists gasoline, grease, lubrication oil, common bilge solvents, salt deposits, and water.

Ignition-protected equipment. Explosive fuel vapors can cause severe injury or death. Gasoline vapors can cause an explosion. USCG Regulation 33CFR183 requires that all electrical devices (ship-to-shore transfer switch, remote start panel, etc.) must be ignition protected when used in a gasoline and gaseous-fueled environment. The electrical devices listed above are not ignition protected and are not certified to operate in a gasoline and gaseous-fueled environment such as an engine room or near fuel tanks. Acceptable locations are the wheelhouse and other living areas sheltered from rain and water splash.

Hazardous Noise

⚠ CAUTION

Hazardous noise.
Can cause hearing loss.

Never operate the generator set without a muffler or with a faulty exhaust system.

Engine noise. Hazardous noise can cause hearing loss. Generator sets not equipped with sound enclosures can produce noise levels greater than 105 dBA. Prolonged exposure to noise levels greater than 85 dBA can cause permanent hearing loss. Wear hearing protection when near an operating generator set.

⚠ WARNING

Hazardous voltage. Moving rotor.
Can cause severe injury or death.

Operate the generator set only when all guards and electrical enclosures are in place.

⚠ CAUTION

Welding the generator set.
Can cause severe electrical equipment damage.

Never weld components of the generator set without first disconnecting the battery, controller wiring harness, and engine electronic control module (ECM).

Grounding electrical equipment. Hazardous voltage can cause severe injury or death. Electrocution is possible whenever electricity is present. Open the main circuit breakers of all power sources before servicing the equipment. Configure the installation to electrically ground the generator set, transfer switch, and related equipment and electrical circuits to comply with applicable codes and standards. Never contact electrical leads or appliances when standing in water or on wet ground because these conditions increase the risk of electrocution.

the generator set from the load by opening the line circuit breaker or by disconnecting the generator set output leads from the transfer switch and heavily taping the ends of the leads. High voltage transferred to the load during testing may cause personal injury and equipment damage. Do not use the safeguard circuit breaker in place of the line circuit breaker. The safeguard circuit breaker does not disconnect the generator set from the load.

Welding the generator set. Can cause severe electrical equipment damage. Before welding the generator set perform the following steps: (1) Remove the battery cables, negative (-) lead first. (2) Disconnect all engine electronic control module (ECM) connectors. (3) Disconnect all generator set controller and voltage regulator circuit board connectors. (4) Disconnect the engine battery-charging alternator connections. (5) Attach the weld ground connection close to the weld location.

Short circuits. Hazardous voltage/current can cause severe injury or death. Short circuits can cause bodily injury and/or equipment damage**.** Do not contact electrical connections with tools or jewelry while making adjustments or repairs. Remove all jewelry before servicing the equipment.

Testing the voltage regulator. Hazardous voltage can cause severe injury or death. High voltage is present at the voltage regulator heat sink. To prevent electrical shock do not touch the voltage regulator heat sink when testing the voltage regulator. *(PowerBoost™, PowerBoost™ III, and PowerBoost™ V voltage regulator models only)*

Connect the generator set to the building/marina electrical system only through an approved device and after the building/marina main switch is opened. Backfeed connections can cause severe injury or death to utility personnel working on power lines and/or personnel near the work area. Some states and localities prohibit unauthorized connection to the utility electrical system. Install a ship-to-shore transfer switch to prevent interconnection of the generator set power and shore power.

Testing live electrical circuits. Hazardous voltage or current can cause severe injury or death. Have trained and qualified personnel take diagnostic measurements of live circuits. Use adequately rated test equipment with electrically insulated probes and follow the instructions of the test equipment manufacturer when performing voltage tests. Observe the following precautions when performing voltage tests: (1) Remove all jewelry. (2) Stand on a dry, approved electrically insulated mat. (3) Do not touch the enclosure or components inside the enclosure. (4) Be prepared for the system to operate automatically. *(600 volts and under)*

WARNING

Hot coolant and steam.
Can cause severe injury or death.

Before removing the pressure cap, stop the generator set and allow it to cool. Then loosen the pressure cap to relieve pressure.

WARNING

Hot engine and exhaust system.
Can cause severe injury or death.

Do not work on the generator set until it cools.

Checking the coolant level. Hot coolant can cause severe injury or death. Allow the engine to cool. Release pressure from the cooling system before removing the pressure cap. To release pressure, cover the pressure cap with a thick cloth and then slowly turn the cap counterclockwise to the first stop. Remove the cap after pressure has been completely released and the engine has cooled. Check the coolant level at the tank if the generator set has a coolant recovery tank.

Servicing the exhaust system. Hot parts can cause severe injury or death. Do not touch hot engine parts. The engine and exhaust system components become extremely hot during operation.

WARNING

Hazardous voltage. Moving rotor. Can cause severe injury or death.

Operate the generator set only when all guards and electrical enclosures are in place.

WARNING

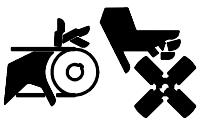

Rotating parts.
Can cause severe injury or death.

Operate the generator set only when all guards, screens, and covers are in place.

WARNING

Airborne particles.
Can cause severe injury or blindness.

Wear protective goggles and clothing when using power tools, hand tools, or compressed air.

the hardware or pulley to release from the generator set engine and can cause personal injury. Retorque all crankshaft and rotor hardware after servicing. Do not loosen the crankshaft hardware or rotor thrubolt when making adjustments or servicing the generator set. Rotate the crankshaft manually in a clockwise direction only. Turning the crankshaft bolt or rotor thrubolt counterclockwise can loosen the hardware.

Servicing the generator set when it is operating. Exposed moving parts can cause severe injury or death. Keep hands, feet, hair, clothing, and test leads away from the belts and pulleys when the generator set is running. Replace guards, screens, and covers before operating the generator set.

Sound shield removal. Exposed moving parts can cause severe injury or death. The generator set must be operating in order to perform some scheduled maintenance procedures. Be especially careful if the sound shield has been removed, leaving the belts and pulleys exposed. *(Sound-shield-equipped models only)*

Notice

NOTICE

This generator set has been rewired from its nameplate voltage to

246242

the set to a voltage different from the voltage on the nameplate. Order voltage reconnection decal 246242 from an authorized service distributor/dealer.

NOTICE

Hardware damage. The engine and generator set may use both American Standard and metric hardware. Use the correct size tools to prevent rounding of the bolt heads and nuts.

NOTICE

When replacing hardware, do not substitute with inferior grade hardware. Screws and nuts are available in different hardness ratings. To indicate hardness, American Standard hardware uses a series of markings, and metric hardware uses a numeric system. Check the markings on the bolt heads and nuts for identification.

NOTICE

Fuse replacement. Replace fuses with fuses of the same ampere rating and type (for example: 3AB or 314, ceramic). Do not substitute clear glass-type fuses for ceramic fuses. Refer to the wiring diagram when the ampere rating is unknown or questionable.

NOTICE

Saltwater damage. Saltwater quickly deteriorates metals. Wipe up saltwater on and around the generator set and remove salt deposits from metal surfaces.

This manual provides troubleshooting and repair instructions for 5–10EOZ/EFOZ model generator sets, controllers, and accessories.

Refer to the engine service manual for generator set engine service information.

x:in:001:001

This manual may be used for models not listed on the front cover.

Information in this publication represents data available at the time of print. Kohler Co. reserves the right to change this publication and the products represented without notice and without any obligation or liability whatsoever.

Read this manual and carefully follow all procedures and safety precautions to ensure proper equipment operation and to avoid bodily injury. Read and follow the Safety Precautions and Instructions section at the beginning of this manual. Keep this manual with the equipment for future reference.

The equipment service requirements are important for safe and efficient operation. Inspect the parts often and perform required service at the prescribed intervals. Maintenance work must be performed by appropriately skilled and suitably-trained maintenance personnel familiar with generator set operation and service.

x:in:001:003

Service Assistance

For professional advice on generator power requirements and conscientious service, please contact your nearest Kohler distributor or dealer.

- Consult the Yellow Pages under the heading Generators—Electric
- Visit the Kohler Power Systems website at KohlerPowerSystems.com
- Look at the labels and stickers on your Kohler product or review the appropriate literature or documents included with the product
- Call toll free in the US and Canada 1-800-544-2444
- Outside the US and Canada, call the nearest regional office

Headquarters Europe, Middle East, Africa (EMEA)
Kohler Power Systems
ZI Senia 122
12, rue des Hauts Flouviers
94517 Thiais Cedex
France
Phone: (33) 1 41 735500
Fax: (33) 1 41 735501

Asia Pacific
Power Systems Asia Pacific Regional Office
Singapore, Republic of Singapore
Phone: (65) 6264-6422
Fax: (65) 6264-6455

China
North China Regional Office, Beijing
Phone: (86) 10 6518 7950
(86) 10 6518 7951
(86) 10 6518 7952
Fax: (86) 10 6518 7955

East China Regional Office, Shanghai
Phone: (86) 21 6288 0500
Fax: (86) 21 6288 0550

India, Bangladesh, Sri Lanka
India Regional Office
Bangalore, India
Phone: (91) 80 3366208
(91) 80 3366231
Fax: (91) 80 3315972

Japan, Korea
North Asia Regional Office
Tokyo, Japan
Phone: (813) 3440-4515
Fax: (813) 3440-2727

Latin America
Latin America Regional Office
Lakeland, Florida, USA
Phone: (863) 619-7568
Fax: (863) 701-7131

Record the product identification numbers in the spaces below immediately after unpacking the products so that the numbers are readily available for future reference. Record field-installed kit numbers after installing the kits.

Generator Set Identification Numbers

Record the product identification numbers from the generator set nameplate(s).

Model Number _____

Specification Number _____

Serial Number _____

Accessory Number	Accessory Description

Manufacturer _____

Model Number _____

Serial Number _____

1.1 General

This manual covers the operation, maintenance, troubleshooting, and repair of the alternating current marine generator sets.

Have an authorized service dealer/distributor perform required servicing to assure your unit continues to meet USCG requirements.

Please take a few moments to read this manual, then carefully follow all service recommendations. See Figure 1-1 through Figure 1-3 for identification and location of components.

The 5EOZ/4EFOZ models are powered by a Yanmar three-cylinder, water-cooled, four-cycle diesel engine. The three-cylinder engine with heat exchanger is model 3TNE68.

The 8EOZ/6.5EFOZ models are powered by a Yanmar three-cylinder, water-cooled, four-cycle diesel engine. The three-cylinder engine with heat exchanger is model 3TNE74.

The 9EOZ/8EFOZ models are powered by a Yanmar three-cylinder, water-cooled, four-cycle diesel engine. The three-cylinder engine with heat exchanger is model 3TNE78A.

The 10EOZ/9EFOZ models are powered by a Yanmar three-cylinder, water-cooled, four-cycle diesel engine. The three-cylinder engine with heat exchanger is model 3TNE82A.

Kohler Co. develops all Kohler® marine generator set ratings using accepted reference conditions of 25°C (77°F) and pressure of 98.9 kPa (29.2 in. Hg) dry barometer. ISO 3046 and ISO 8528-1 include reference conditions and output calculations. Obtain technical information bulletin (TIB-101) on ratings guidelines for complete ratings definitions.

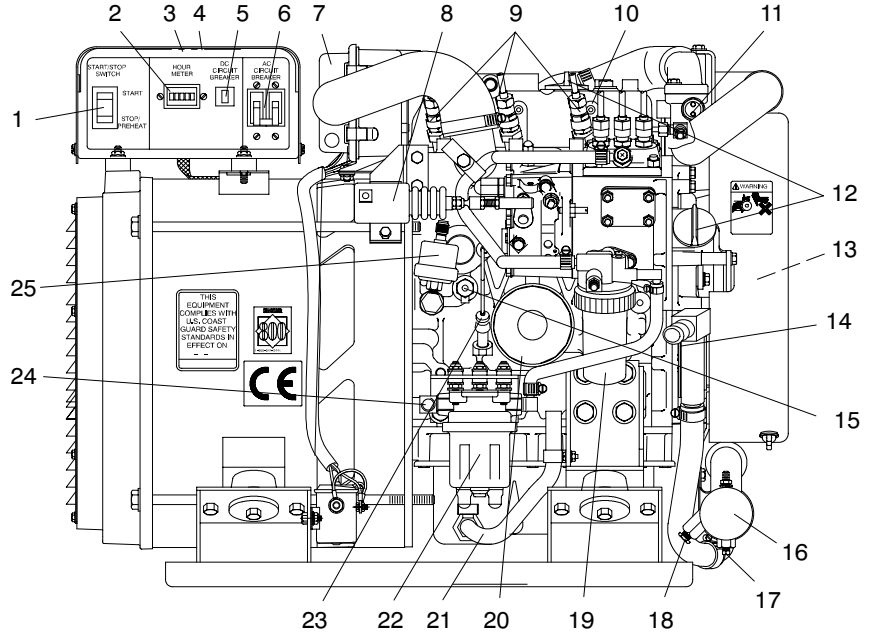

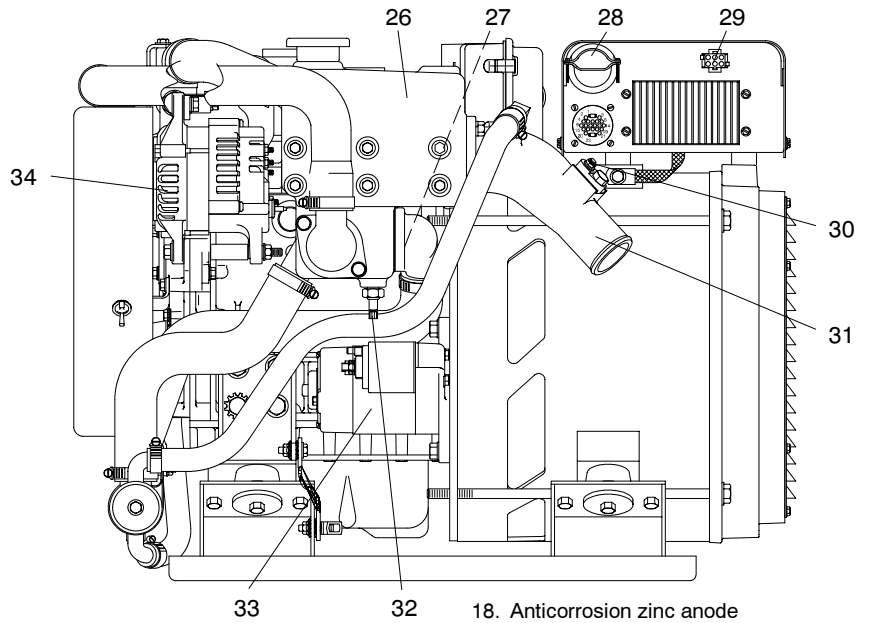

DK-250000

1. Start/stop switch
2. Hourmeter
3. Controller
4. Nameplate
5. DC circuit breaker
6. AC circuit breaker
7. Air cleaner
8. Fuel solenoid
9. Fuel injectors
10. Fuel return connection
11. High water temperature switch
12. Oil fill
13. V-belts
14. Seawater pump (water inlet)
15. Coolant (fresh water) drain
16. Heat exchanger
17. Coolant drain (fresh water)
18. Anticorrosion zinc anode
19. Fuel filter
20. Oil filter
21. Oil drain valve and hose
22. Fuel feed pump
23. Oil check
24. Fuel inlet connection
25. Low oil pressure safety shutdown switch
26. Wet exhaust manifold
27. Thermostat
28. AC load lead connector
29. Remote start connector
30. High exhaust temperature safety shutdown switch
31. Mixing elbow
32. Water temperature sender
33. Engine starter
34. Battery charging alternator

Figure 1-1 Generator Set Service View (5EOZ/4EFOZ)

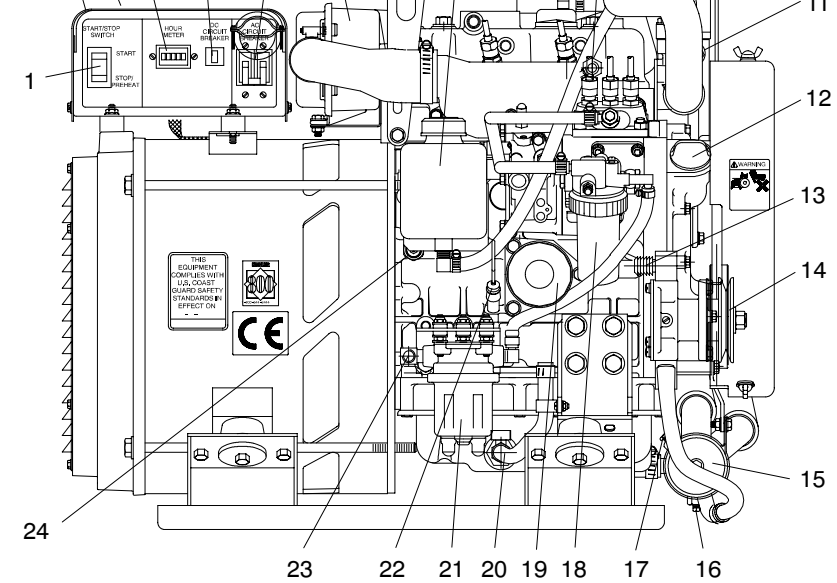

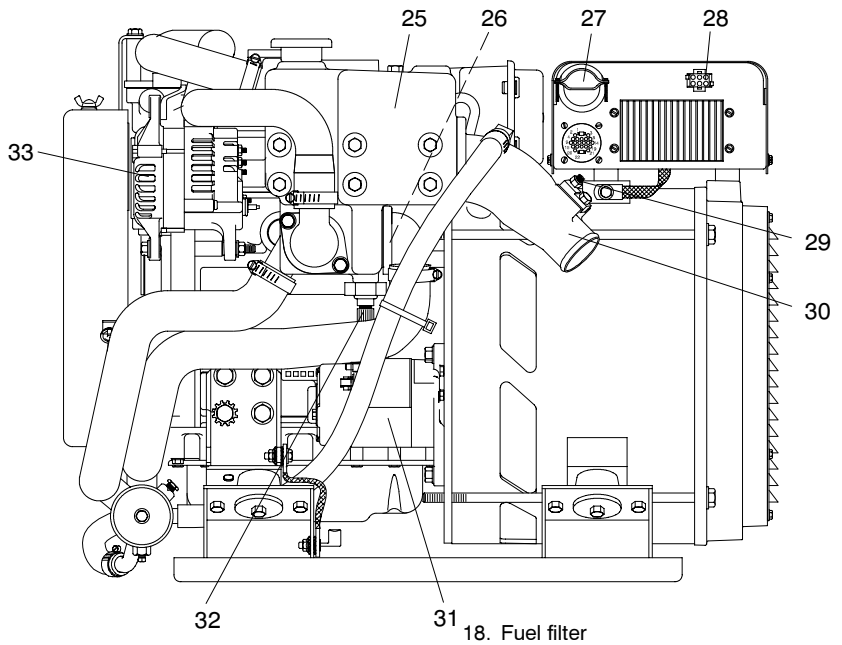

A-358000A-A

1. Start/stop switch
2. Controller
3. Nameplate
4. Hourmeter
5. DC circuit breaker
6. AC circuit breaker
7. Air cleaner
8. Coolant recovery bottle
9. Pressure cap
10. Fuel return connection
11. High water temperature shutdown switch
12. Oil fill
13. Seawater pump (water inlet)
14. V-belts
15. Heat exchanger
16. Coolant drain (fresh water)
17. Anticorrosion zinc anode
18. Fuel filter
19. Oil filter
20. Oil drain valve and hose
21. Fuel feed pump
22. Oil check
23. Fuel inlet connection
24. Low oil pressure safety shutdown switch
25. Wet exhaust manifold
26. Thermostat
27. AC load lead connector
28. Remote start connector
29. High exhaust temperature safety shutdown switch
30. Mixing elbow
31. Engine starter
32. Water temperature sender
33. Battery charging alternator

Figure 1-2 Generator Set Service View (8EOZ/6.5EFOZ)

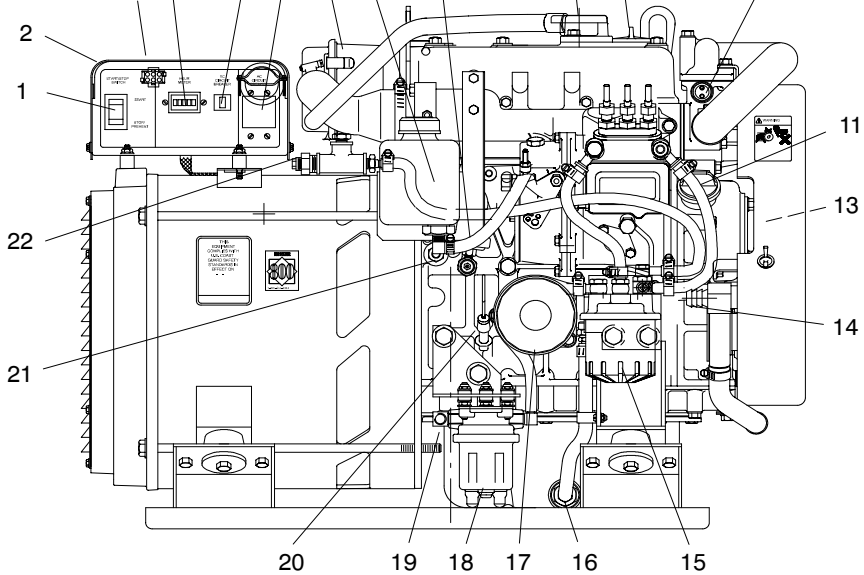

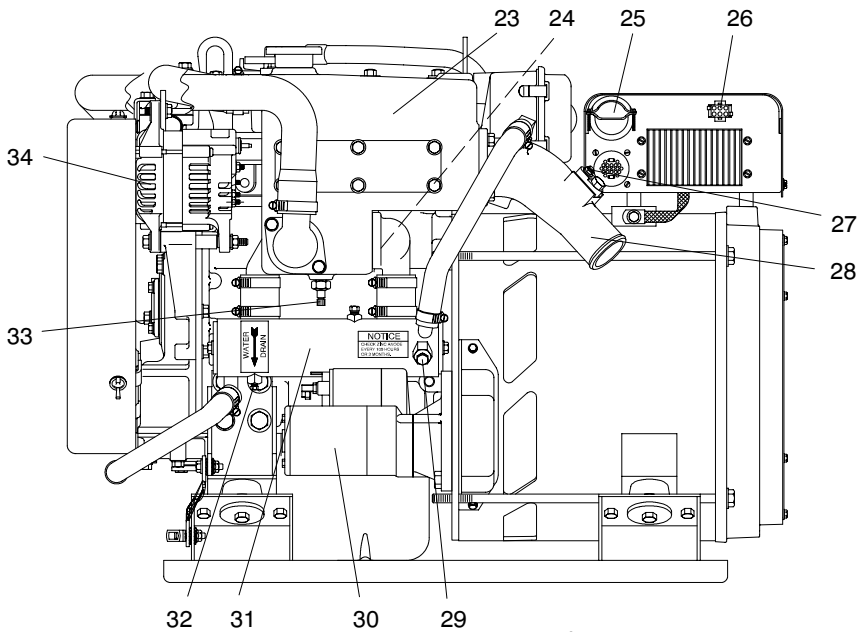

A-358000A-A

1. Start/stop switch
2. Controller
3. Nameplate
4. Hourmeter
5. DC circuit breaker
6. AC circuit breaker
7. Air cleaner
8. Coolant overflow bottle
9. Low oil pressure safety shutdown switch
10. Pressure cap
11. Oil fill
12. High water temperature safety shutdown switch
13. V-belts
14. Seawater pump (water inlet)
15. Fuel filter
16. Oil drain valve and hose
17. Oil filter
18. Fuel feed pump
19. Fuel inlet connection
20. Oil check
21. Coolant drain (fresh water)
22. Fuel return
23. Wet exhaust manifold
24. Thermostat
25. AC load lead connector
26. Remote start connector
27. High exhaust temperature safety shutdown switch
28. Mixing elbow
29. Anticorrosion zinc anode
30. Engine starter
31. Heat exchanger
32. Coolant drain (fresh water)
33. Water temperature sender
34. Battery charging alternator

Figure 1-3 Generator Set Service View (9/10EOZ and 8/9EFOZ)

Engine manufacturer	Yanmar			
Engine model	3TNE68	3TNE74	3TNE78A	3TNE82A
Number of cylinders	3			
Cylinder block material	Cast iron			
Cylinder head material	Cast iron			
Piston rings	2 compression/1 oil			
Crankshaft material	Stamped forging			
Connecting rod material	Forged carbon steel			
Governor	Centrifugal, mechanical			
Bore x stroke, mm (in.)	68 x 72 (2.67 x 2.83)	74 x 78 (2.91 x 3.07)	78 x 84 (3.07 x 3.30)	82 x 84 (3.22 x 3.30)
Displacement, L (CID)	0.784 (47.83)	1.006 (61.39)	1.204 (73.45)	1.330 (81.14)
Compression ratio	23.0:1		18.0:1	
Horsepower, 60/50 Hz	10.1/8.4	14/11.6		17.7/14.8
RPM, 60/50 Hz	1800/1500			
Direction of rotation (as viewed from generator end)	Counterclockwise			
Lubrication system	Pressure, trochoid pump			
Lube oil capacity w/filter, L (qts.)	3 (3.2)	2.4 (2.3)	5.2 (5.5)	3.4 (3.6)
Oil recommendation, API	CD, CD/CC, or CC			
Engine firing order (#1 cylinder nearest to flywheel)	1-3-2			
Fuel injection timing (BTDC)	14° ± 1°		16° ± 1°	10° ± 1°
Fuel injection pressure, kg/cm sq. (psi)	120 (1706)			200 (2844)
Combustion system	Indirect injection, swirl precombustion chamber		Direct injection	
Battery voltage	12 volt, negative ground			
Battery recommendation, min.	500 CCA, 100 amp hr.			
Battery charging (alternator)	40 amps @ 12 volts		50 amps @ 12 volts	
Fuel recommendation	Diesel, ISO 8217 DMA, BS 2869 Part 1 Class A1 or Part 2 Class A2			
Fuel shutoff solenoid system	Electric			
Fuel feed pump	Electric, rotary vane			
Fuel pump priming	Electric			
Max. recommended fuel pump lift, m (ft.)	1.2 (4)			
Coolant capacity, L (qts.)	1.8 (1.9)	3.9 (4.12)		5.2 (5.5)
Coolant recovery tank capacity, L (oz.)	0.24 (8.0)			
Recommended coolant	50% ethylene glycol; 50% clean, softened water			
Thermostat	71°C (160°F)			
Pressure cap rating, kPa (psi)	96.5 (14.0)			
Starter motor	0.8 kW Bendix automotive type		1.8 kW Bendix, gear-reduction automotive type	

Intake/exhaust valve clearance (cold), mm (in.)	0.15–0.25 (0.006–0.010)			
Belt tension (force) @ 10 kg (22 lbs.), mm (in.)	10–15 (0.4–0.6)			
Flex plate to rotor bolt torque (3/8-16), Nm (ft. lbs.)	45 (35)	36.6 (27)	45 (35)	38 (28)
Flex plate to flywheel bolt torque (M8-1.25), Nm (ft. lbs.)	25 (20)	38 (28)	25 (20)	19 (14)
Overbolt torque (M10-1.5), Nm (ft. lbs.)	45 (35)	34 (25)	45 (35)	34 (25)
Inlet water line hose ID (seawater pump inlet), mm (in.)	16 (5/8)			
Outlet water line hose ID (mixing elbow outlet), mm (in.)	51 (2)			
Fuel inlet (fuel pump inlet)	1/4 NPT			
Fuel return size type	1/4 NPT			

1.4 Generator

Generator Model	**5/8EOZ and 4/6.5EFOZ**	**9/10EOZ and 8/9EFOZ**
Hot exciter field voltage/current readings at rated voltage*		
No load (63 Hz) (volts/amps)	19/0.9	12/0.8
Full load (60 Hz) (volts/amps)	32/1.5	33/2.2
Resistor (F1 lead to exciter field) (ohms)	15 ±2	10 ±2
Cold exciter field resistance (ohms)	4.8	
Cold exciter armature resistance (ohms)	1.2	
Cold main field (rotor) resistance (ohms)	5.0	5.7
Stator output voltages with separately excited generator, using 12-volt battery (60 Hz only)*		
1–2, 3–4, 33–44 (volts)	81	115
33–55 (volts)	105	155
B1-B2 (volts)	10	15
Cold stator resistance		
1–2, 3–4, 33–44 (ohms)	0.3	0.2
33–55 (ohms)	2.1	1.9
B1-B2 (ohms)	0.1	

* Includes resistor in exciter field circuit.

2.1 General

⚠ WARNING

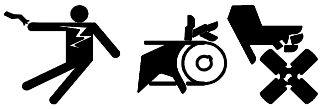

Accidental starting.
Can cause severe injury or death.

Disconnect the battery cables before working on the generator set. Remove the negative (–) lead first when disconnecting the battery. Reconnect the negative (–) lead last when reconnecting the battery.

Disabling the generator set. Accidental starting can cause severe injury or death. Before working on the generator set or equipment connected to the set, disable the generator set as follows: (1) Place the generator set start/stop switch in the STOP position. (2) Disconnect the power to the battery charger, if equipped. (3) Remove the battery cables, negative (–) lead first. Reconnect the negative (–) lead last when reconnecting the battery. Follow these precautions to prevent the starting of the generator set by the remote start/stop switch.

⚠ WARNING

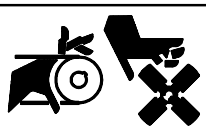

Rotating parts.
Can cause severe injury or death.

Operate the generator set only when all guards, screens, and covers are in place.

Servicing the generator set when it is operating. Exposed moving parts can cause severe injury or death. Keep hands, feet, hair, clothing, and test leads away from the belts and pulleys when the generator set is running. Replace guards, screens, and covers before operating the generator set.

Sound shield removal. Exposed moving parts can cause severe injury or death. The generator set must be operating in order to perform some scheduled maintenance procedures. Be especially careful if the sound shield has been removed, leaving the belts and pulleys exposed.
(Sound-shield-equipped models only)

NOTICE

Saltwater damage. Saltwater quickly deteriorates metals. Wipe up saltwater on and around the generator set and remove salt deposits from metal surfaces.

Note: See the generator set operation manual for the service schedule and other service not included in this manual.

2.2 Lubrication System

The following paragraphs describe the engine lubrication system.

Use oil that meets the American Petroleum Institute (API) classification of CD, CC/CD, or CC. Using unsuitable oil or neglecting an oil change may result in damage and a shorter engine life. Figure 2-1 shows the recommended Society of Automotive Engineers (SAE) viscosity designation for given operating temperature ranges.

Note: Failure to observe these standards may cause inadequate lubrication/oil pressure and cold-starting difficulties.

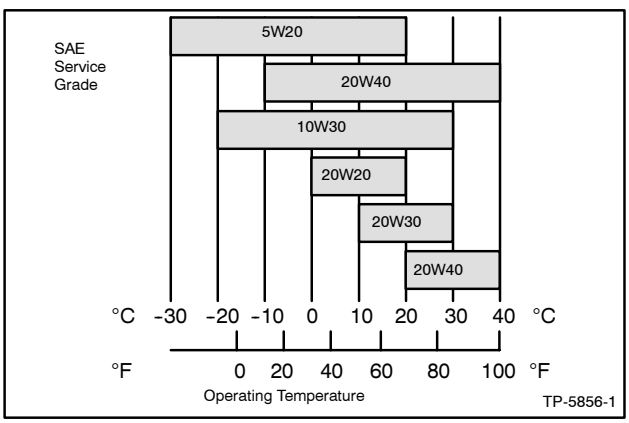

Figure 2-1 Engine Oil Selection

2. Place the pump outlet hose into a container. Remove the oil-fill cap(s). One is located near the top of the engine on the valve cover and one is located near the governor.

3. Activate the pump until all of the oil is removed. Allow ample time for all of the oil to drain.

4. Turn the valve at the base of the oil-drain hose to the closed position.

5. Replace the engine oil filter.

6. Fill the engine crankcase to the specified level with oil. The figures in Section 1 show typical oil fill locations. See Figure 2-1 for oil selection and Figure 2-2 for oil capacities.

7. Start the generator set and check for oil leaks.

8. Stop the generator set. Check the oil level. Add oil, as necessary, to bring the level up to the Max mark on the dipstick.

Model	L (Qts.)
5EOZ and 4EFOZ	3.0 (3.2)
8EOZ and 6.5EFOZ	2.3 (2.4)
9EOZ and 8EFOZ	5.2 (5.5)
10EOZ and 9EFOZ	5.2 (5.5)

Figure 2-2 Oil Capacities

regarding battery care and maintenance.

⚠ WARNING

Sulfuric acid in batteries.
Can cause severe injury or death.

Wear protective goggles and clothing. Battery acid may cause blindness and burn skin.

Battery electrolyte is a diluted sulfuric acid. Battery acid can cause severe injury or death. Battery acid can cause blindness and burn skin. Always wear splashproof safety goggles, rubber gloves, and boots when servicing the battery. Do not open a sealed battery or mutilate the battery case. If battery acid splashes in the eyes or on the skin, immediately flush the affected area for 15 minutes with large quantities of clean water. Seek immediate medical aid in the case of eye contact. Never add acid to a battery after placing the battery in service, as this may result in hazardous spattering of battery acid.

Battery gases. Explosion can cause severe injury or death. Battery gases can cause an explosion. Do not smoke or permit flames or sparks to occur near a battery at any time, particularly when it is charging. Do not dispose of a battery in a fire. To prevent burns and sparks that could cause an explosion, avoid touching the battery terminals with tools or other metal objects. Remove all jewelry before servicing the equipment. Discharge static electricity from your body before touching batteries by first touching a grounded metal surface away from the battery. To avoid sparks, do not disturb the battery charger connections while the battery is charging. Always turn the battery charger off before disconnecting the battery connections. Ventilate the compartments containing batteries to prevent accumulation of explosive gases.

is afloat. Follow the procedure below when storing your generator set for 3 months or more.

Storage Procedure

1. Start and run the generator set until it reaches operating temperature, about 30 minutes.

2. Stop the generator set.

3. Change the oil and oil filter. See the generator set operation manual.

4. Drain the seawater from the heat exchanger by removing the coolant drain plug.

5. Close the seacock and remove the hose at the seacock. Place the hose in a container having approximately 3.7–7.5 L (1–2 gal.) of marine antifreeze. Use an environmentally safe marine antifreeze with corrosion inhibitors.

6. With a container at the exhaust outlet, run the generator set until coolant discharges at the exhaust outlet or until depleting the coolant mixture. Do not allow the coolant mixture to flow into waterways.

seacock closed.

9. Check the coolant level in the heat exchanger and add coolant if necessary.

   Note: Use antifreeze with the lowest available temperature rating.

10. Clean the exterior of the generator set and spread a light film of oil or silicon spray over any exposed surfaces which may be subject to rust or corrosion.

11. Disconnect and remove the battery. Place the battery in a dry location for the storage period. Recharge the battery once a month to maintain a full charge.

12. Cover the entire unit with a breathable dust cover.

3.1 Air Intake Silencer/Filter

A dry-type air cleaner silences and filters the intake air. The air intake silencer assembly connects to the intake manifold via a flexible hose.

At the interval specified in the service schedule, clean or replace the air intake silencer. Clean or replace the air cleaner more frequently in dirty, dusty conditions. Follow the procedure described below.

Air Cleaner Service/Replacement Procedure

1. Release the four spring clips to open the housing and remove the air silencer element.
2. Tap the element lightly against a flat surface to dislodge loose surface dirt. Do not clean the element in any liquid or use compressed air as these will damage the filter element.
3. Examine the element and its housing for damage and wear. Replace the element or its housing, if necessary.
4. Wipe the cover and base with a clean rag to remove any dirt. Make sure the sealing surfaces fit correctly and reattach the spring clips.

3.2 Exhaust System

⚠ WARNING

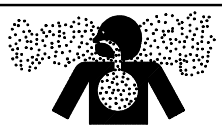

Carbon monoxide.
Can cause severe nausea, fainting, or death.

The exhaust system must be leakproof and routinely inspected.

Inspecting the exhaust system. Carbon monoxide can cause severe nausea, fainting, or death. For the safety of the craft's occupants, install a carbon monoxide detector. Consult the boat builder or dealer for approved detector location and installation. Inspect the detector before each generator set use. In addition to routine exhaust system inspection, test the carbon monoxide detector per the manufacturer's instructions and keep the detector operational at all times.

Check for exhaust leaks and blockages. Check the silencer and piping condition and check for tight exhaust system connections.

Inspect the exhaust system components (exhaust manifold, mixing elbow, exhaust line, hose clamps, silencer, and outlet flapper) for cracks, leaks, and corrosion.

- Check the hoses for softness, cracks, leaks, or dents. Replace the hoses as needed.
- Check for corroded or broken metal parts and replace them as needed.
- Check for loose, corroded, or missing clamps. Tighten or replace the hose clamps and/or hangers as needed.
- Check that the exhaust outlet is unobstructed.
- Visually inspect for exhaust leaks. Check for carbon or soot residue on exhaust components. Carbon and soot residue indicates an exhaust leak. Seal leaks as needed.
- Ensure that the carbon monoxide detector is (1) in the craft, (2) functional, and (3) energized whenever the generator set operates.

3.3 Mixing Elbow

Check the mixing elbow for carbon buildup and corrosion inside the pipe. Clean the residual carbon buildup with a wire brush. Inspect the exhaust manifold flange for cracking and corrosion. The mixing elbow combines high temperature exhaust and cooling seawater. The mixture, when exposed to engine vibration, makes conditions conducive to rapid deterioration and failure if not correctly maintained. If any damage is detected with the mixing elbow or other exhaust components, replace the damaged components to prevent engine exhaust (carbon monoxide) leakage.

4.1 General

In most installations, both the generator set and the propulsion engine operate from a common fuel tank with a dual dip tube arrangement. The generator set dip tube is shorter than the propulsion engine's dip tube. With this arrangement, fuel may not be available to the generator set when the fuel supply is low. See Figure 4-1 for a fuel system schematic.

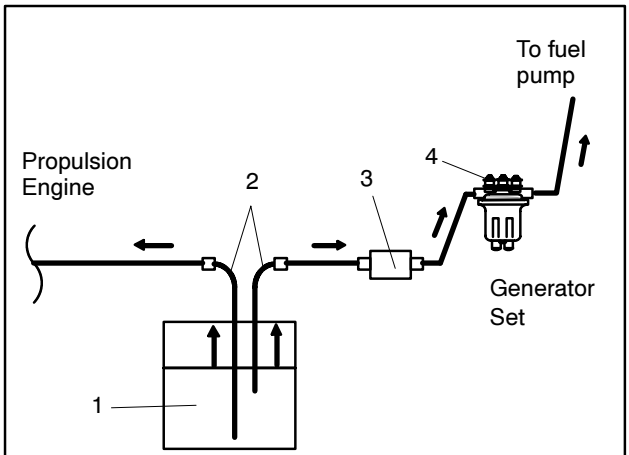

1. Fuel tank
2. Dual dip tubes
3. Fuel filter
4. Fuel feed pump

Figure 4-1 Fuel System Schematic Typical

4.2 Fuel Specifications

Use a clean, good quality diesel fuel oil with a cetane number of 45 or greater. Clean fuel prevents diesel fuel injectors and pumps from clogging.

Fuel Recommendation	
United States	ISO 8217 DMA, BS 2869 Part 1 Class A1 or Part 2 Class A2
United Kingdom	BS 2869-1983, Part 2 Class A2
Germany	DIN 51 601-1978

4.3 Fuel Filter

The quality and condition of the fuel largely determine the filter's useful life. Replace the fuel filter element according to the service schedule. Section 1.2 shows the location of the fuel filter. There are two types of fuel filtering systems, the spin-on fuel filter and the fuel filter element. Use the applicable procedure below to replace the fuel filter. See Figure 4-2 or Figure 4-3.

Spin-On Fuel Filter Replacement Procedure

1. Place the generator set start/stop switch in the STOP position.
2. Disconnect the generator set engine starting battery, negative (–) lead first.
3. Close the fuel supply valve.
4. Remove the fuel filter. See Figure 4-2.
5. Clean the contact surface of the fuel filter adapter.
6. Lightly lubricate the gasket surface of the new fuel filter with fresh fuel. Thread the filter onto the adapter until the gasket makes contact; hand-tighten the filter an additional one-half turn.
7. Open the fuel supply valve.
8. Reconnect the generator set engine starting battery, negative (–) lead last.
9. Bleed the fuel system. See Section 4.4.

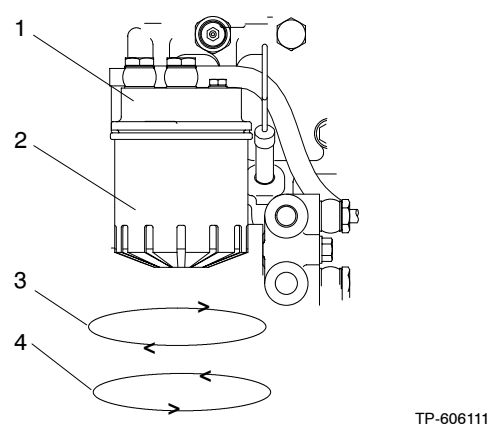

1. Fuel filter adapter
2. Fuel filter
3. Removal (counterclockwise)
4. Installation (clockwise)

Figure 4-2 Spin-On Fuel Oil Filter

STOP position.

2. Disconnect the generator set engine starting battery, negative (–) lead first.

3. Close the fuel supply valve.

4. Remove the retaining ring, filter cup, o-ring, fuel filter element and spring.

5. Replace the fuel filter element and install as shown in Figure 4-3.

6. Open the fuel supply valve.

7. Reconnect the generator set engine starting battery, negative (–) lead last.

8. Bleed the fuel system. See Section 4.4.

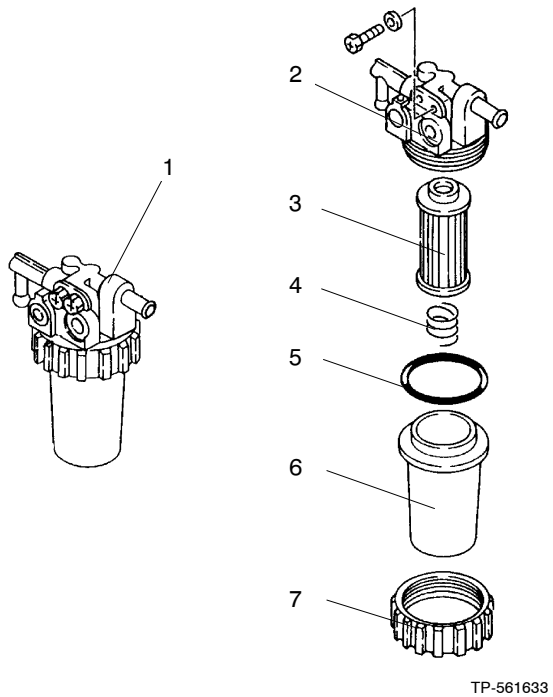

1. Fuel strainer assembly
2. Body
3. Fuel element
4. Spring
5. O-ring
6. Filter cup
7. Retaining ring

Figure 4-3 Fuel Oil Filter Element

failures and/or erratic operation. One or more of the following causes air to collect in the fuel system:

1. The generator set operates until the fuel supply is emptied.

2. The air leaks in the suction side of the fuel system.

3. Replacing the fuel filter.

4. Vapor lock.

Note: Connect the battery during the priming procedure to allow engine cranking. Do not allow the engine/generator to start. To prevent starting, *toggle* the start/stop switch by momentarily placing the start/stop switch in the START position for a few seconds and then placing the switch in the STOP position. Close the seacock during bleeding.

Fuel System Bleeding Procedure

1. Loosen the fuel filter screw at position 1. See Figure 4-4.

2. Toggle the start/stop switch until fuel, free of air bubbles, flows from the vent screw at position 1. Tighten the screw.

3. Loosen the fuel filter screw at position 2.

4. Toggle the start/stop switch until fuel, free of air bubbles, flows from the vent screw at position 2. Tighten the screw.

5. Loosen the fuel injection pump screw at position 5.

6. Toggle the start/stop switch until fuel, free of air bubbles, flows from the vent screw at position 5. Tighten the screw.

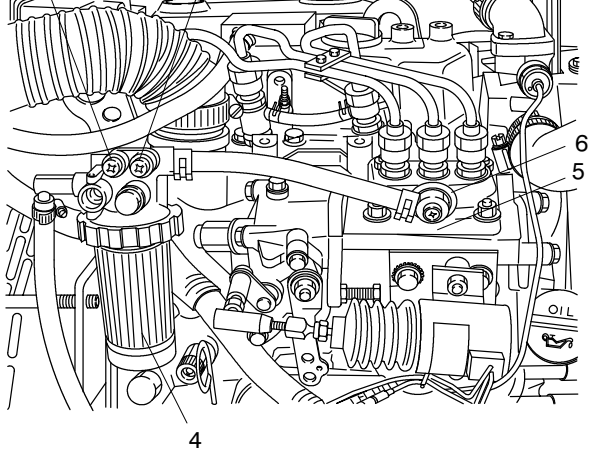

9/10EOZ and 8/9EFOZ Models

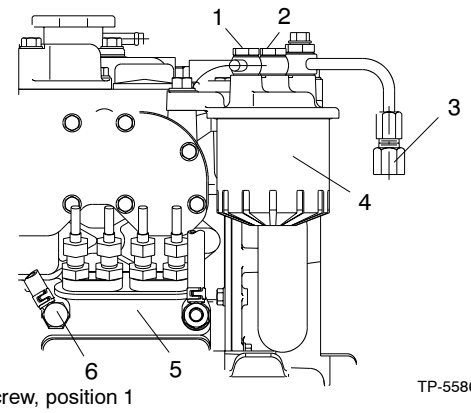

1. Vent screw, position 1
2. Vent screw, position 2
3. Fuel return
4. Fuel filter
5. Fuel injection pump
6. Vent screw, position 5

Figure 4-4 Fuel System Bleed Points, Typical

to the fuel-on position when energized. The fuel solenoid is spring loaded to return the injector-pump lever to the fuel-off position when deenergized.

The generators in this manual use a 3-lead fuel solenoid. This solenoid has a white lead (P) which energizes the pull-in coil only during cranking. During operation, the red lead energizes the hold coil and the black lead is the common ground.

Current (amps) and resistance readings are shown in Figure 4-5. Resistance readings determine if the solenoid windings are open or shorted. These readings must be taken with fuel solenoid disconnected from engine wiring harness.

Fuel Solenoid	Reading
Pull-In	50 Amps
Hold	1.0 Amps
Black-White (P) Leads	0.12–0.26 Ohms
Black-Red Leads	11-13 Ohms

Figure 4-5 Fuel Solenoid Readings

injection pump lever be properly adjusted to allow the solenoid plunger to fully compress. Improper adjustment may cause burnout of the pull-in coil. If the fuel solenoid setting is suspected to be incorrect, use the following procedure to correct and see Figure 4-6.

Fuel Solenoid Adjustment Procedure

1. Remove the fuel solenoid linkage.

2. With the fuel solenoid's plunger fully compressed, align the linkage and check injection pump lever for travel. The fuel solenoid should fully compress and the injection pump lever should be 1.6 mm (0.05 in.) before the lever reaches the stop (internal full open) position.

   Note: The fuel solenoid must compress (bottom) fully or burnout of the fuel solenoid pull-in coil will occur.

3. If the alignment is not correct, check the linkage and mounting brackets. Loosen locknuts and adjust the ball joint's length in or out to attain proper alignment. Tighten the locknut.

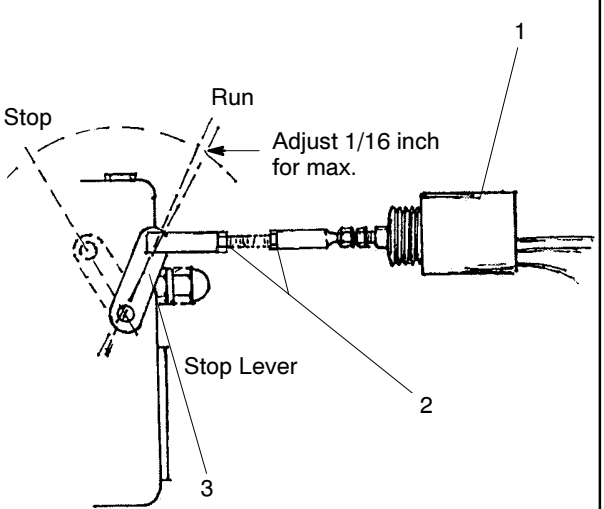

1. Fuel solenoid
2. Locknuts
3. Ball joints

Figure 4-6 Fuel Solenoid Linkage

injection pump.

Fuel Pump Test Procedure

1. Remove the two leads from the terminals at the bottom of the fuel pump. The pump terminals are labeled (–) and (+). See Figure 4-7.

2. Connect the inlet side of the pump to a fuel source. Disconnect the outlet hose from the fuel filter and place the hose end in a container to catch the fuel.

3. Connect the positive (+) terminal of the 12-volt battery to the positive terminal of the fuel pump. Connect the negative terminal of the fuel pump to the negative (–) terminal of the battery. You should hear the pump operate and see the fuel discharge from the pump outlet. Replace the pump if it does not operate.

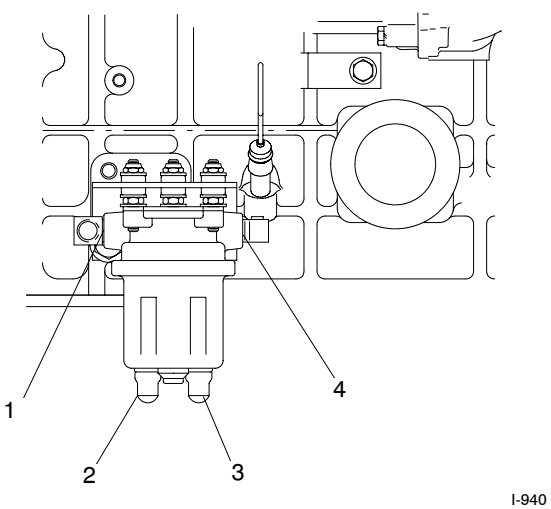

1. Fuel inlet
2. Negative terminal
3. Positive terminal
4. Fuel outlet

Figure 4-7 Fuel Pump

speed constant by automatically adjusting the amount of fuel supplied to the engine according to changes in the load. No regular service is required on the governor. The factory adjusts the governor during run-in, and further adjustment should not be needed unless poor governor control develops after extended generator usage.

60 Hz generator sets are designed to operate at 57–63 Hz, 1800 rpm under full load and 1890 rpm under no load.

50 Hz generator sets are designed to operate at 47–53 Hz, 1500 rpm under full load and 1590 rpm under no load.

Check the engine speed using a frequency meter connected to the load leads. Loosen the locking nut on the speed adjusting screw. Turn the screw clockwise to increase the speed and frequency. Turn the screw counterclockwise to decrease the speed. Tighten the locknut at the new setting. See Figure 4-8 or Figure 4-9.

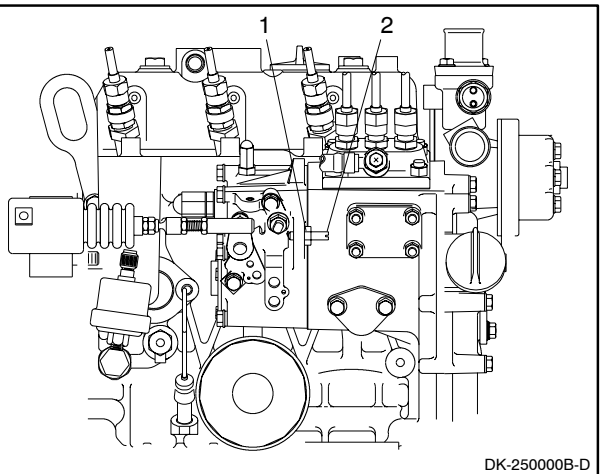

1. Locknut
2. Speed adjusting screw

Figure 4-8 Governor, 5EOZ/4EFOZ

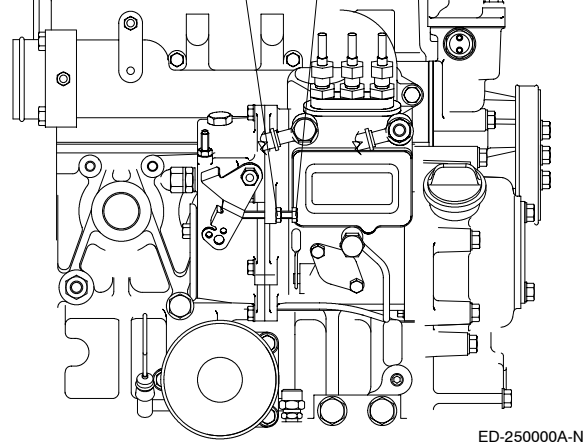

1. Locknut
2. Speed adjusting screw

Figure 4-9 Governor, 8/9/10EOZ and 6.5/8/9EFOZ

5.1 General

The heat exchanger cooling system consists of a heat exchanger with a coolant recovery tank, a thermostat, a rubber impeller seawater pump, a centrifugal-type engine circulating pump, a water-cooled exhaust manifold, and an exhaust mixer. See Figure 5-1 for cooling system components.

⚠ WARNING

Hot coolant and steam.
Can cause severe injury or death.

Before removing the pressure cap, stop the generator set and allow it to cool. Then loosen the pressure cap to relieve pressure.

Checking the coolant level. Hot coolant can cause severe injury or death. Allow the engine to cool. Release pressure from the cooling system before removing the pressure cap. To release pressure, cover the pressure cap with a thick cloth and then slowly turn the cap counterclockwise to the first stop. Remove the cap after pressure has been completely released and the engine has cooled. Check the coolant level at the tank if the generator set has a coolant recovery tank.

NOTICE

Saltwater damage. Saltwater quickly deteriorates metals. Wipe up saltwater on and around the generator set and remove salt deposits from metal surfaces.

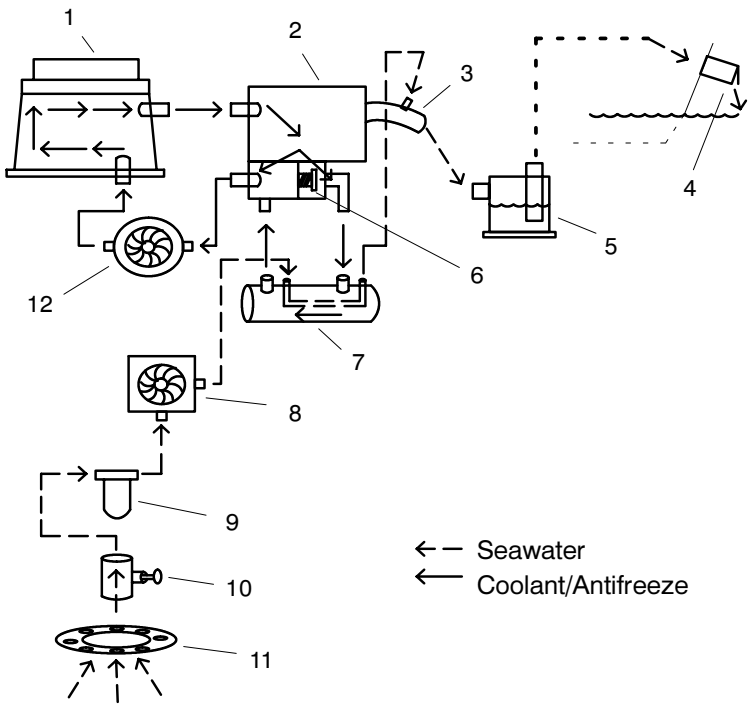

1. Engine block
2. Exhaust manifold
3. Exhaust mixer elbow
4. Outlet flapper
5. Silencer
6. Thermostat
7. Heat exchanger
8. Engine seawater pump
9. Seawater strainer
10. Seacock
11. Intake strainer
12. Engine-driven water pump

Figure 5-1 Cooling System Components

Each generator set is equipped with a water-cooled exhaust manifold. Engine coolant circulates through the manifold, reducing the amount of heat radiated from the exhaust into the surrounding area. The engine thermostat is located in the manifold. See Section 1 for the thermostat location. See Figure 5-2 and Figure 5-3 for exhaust manifold bolt tightening sequence and torques.

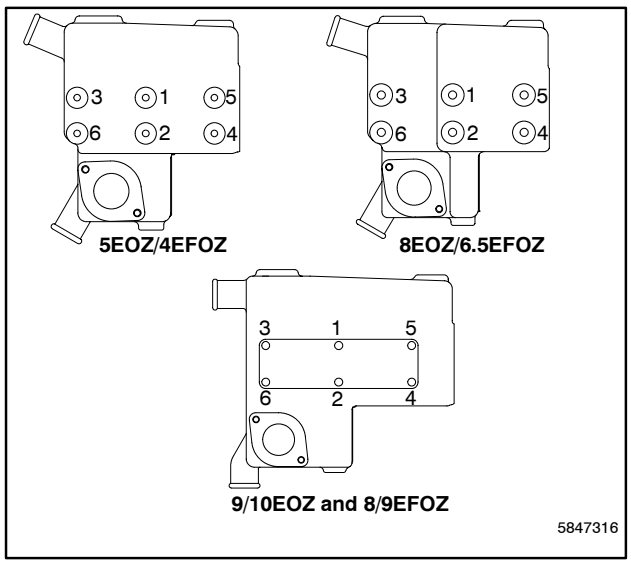

Figure 5-2 Water-Cooled Exhaust Manifold Bolt Tightening Sequence

Model	Bolt Torque
5EOZ/4EFOZ	8 Nm (6 ft. lbs.)
8/9/10EOZ and 6.5/8/9EFOZ	19 Nm (14 ft. lbs.)

Figure 5-3 Exhaust Manifold Bolt Tightening Torques

5.3 Closed Heat Exchanger

In a closed cooling system, the seawater circulates through separate chambers within the heat exchanger to cool the engine water. The seawater then mixes with engine exhaust and ejects out the exhaust outlet. See Section 1.3 for the coolant capacities. Add an additional 0.24 L (8.0 oz.) of coolant to the coolant recovery tank.

5.4 Fill Check and Coolant

Keep the coolant recovery tank approximately 1/4 full. Before filling the cooling system, close all petcocks and tighten all hose clamps. Use a solution of 50% ethylene tank. Periodically check the coolant level on closed systems by removing the pressure cap. Do not rely solely on the level in the coolant recovery tank. Add fresh coolant mixture until the level is just below the overflow tube opening.

Do not add coolant to a hot engine. Adding coolant to a hot engine can cause the cylinder block or cylinder head to crack. Wait until the engine has cooled.

Note: Coolant solution. A coolant solution of 50% ethylene glycol provides freezing protection to −37°C (−34°F) and overheating protection to 129°C (265°F). A coolant solution with less than 50% ethylene glycol may not provide adequate freezing and overheating protection. A coolant solution with more than 50% ethylene glycol can cause engine or component damage. Do not use alcohol or methanol antifreeze or mix them with the specified coolant. Consult the engine manufacturer's operation manual for engine coolant specifications.

5.5 Flush and Clean Cooling System

For optimum protection, drain, flush, and refill the cooling system at the interval listed in the operation manual's service schedule.

Pay special attention to the coolant level. Check the coolant level as described earlier.

Flush and Clean Procedure

1. Remove the pipe plug located in the heat exchanger.
2. Open the petcocks on the engine block and cooling system and let the system drain completely. Some models may have petcocks located behind the belt guard.
3. Remove the pressure cap to simplify draining.
4. Drain, clean, and flush the cooling system, including the coolant recovery tank, with clean water.
5. Close the petcocks.
6. Fill the cooling system with recommended coolant.

to raise the boiling point of the coolant, enabling higher operating temperatures. If the cap leaks, replace it with a cap having the same temperature rating.

5.7 Impeller Inspection and Replacement

The belt-driven seawater pump is located on the service side of the generator set. Check and change the seawater pump impeller at the interval specified in the service schedule. Follow the instructions included with the impeller kit. If the instructions are not included with the kit, use the following procedure.

Inspection and Replacement Procedure

1. Close the seacock.
2. Remove the seawater pump coverplate. See Figure 5-4.
3. Remove the impeller.
4. Inspect the impeller for damage, including visible cracked, broken, worn or missing fins. The impeller vanes should be straight and flexible. See Figure 5-5.
5. Lubricate the impeller with soapy water before re-installation.
6. While installing the impeller, always rotate the drive shaft and the impeller together in the same direction as the engine rotation.
7. Inspect the coverplate and gasket for corrosion and/or damage. Replace damaged or worn components.
8. Lubricate the gasket with silicon grease and attach the gasket and coverplate to the seawater pump housing.
11. Stop the generator set and repair leaks or replace components as necessary.

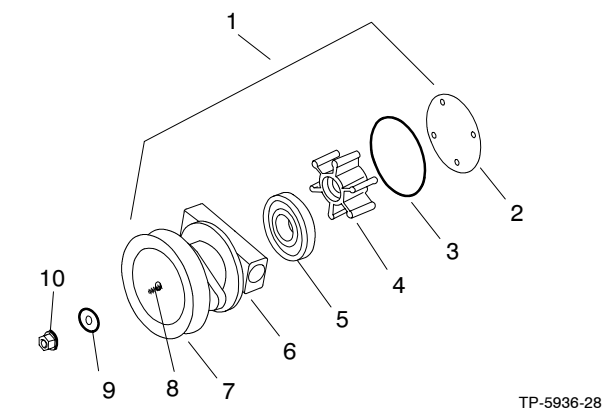

1. Seawater pump
2. Coverplate
3. Gasket
4. Impeller
5. Bearing
6. Housing
7. Pulley
8. Drive shaft
9. Washer
10. Nut

Figure 5-4 Seawater Pump, Typical

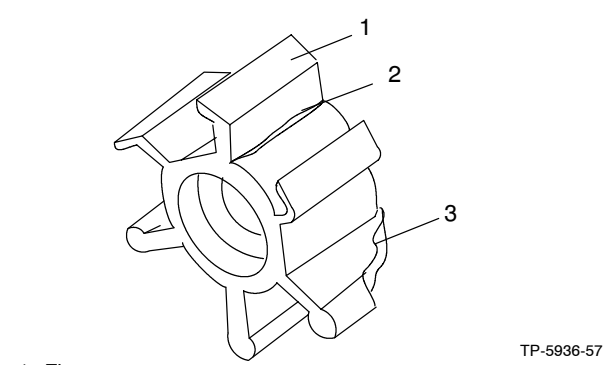

1. Flat spot
2. Crack
3. Broken vane

Figure 5-5 Worn Impeller

WARNING

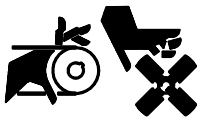

Rotating parts.
Can cause severe injury or death.

Operate the generator set only when all guards, screens, and covers are in place.

Servicing the generator set when it is operating. Exposed moving parts can cause severe injury or death. Keep hands, feet, hair, clothing, and test leads away from the belts and pulleys when the generator set is running. Replace guards, screens, and covers before operating the generator set.

Check the belt tensions at the interval specified in the service schedule. If the tensions are not within specifications, adjust as necessary using the following procedure.

Belt Tensioning Procedure

1. Stop the generator set.
2. Disconnect the generator set engine starting battery, negative (–) lead first.
3. Remove the belt guard.
4. Check the belt tension at the midpoint of the longest span of the belt by pressing the belt with your finger and measuring the resulting deflection. See Figure 5-6 and Figure 5-7. If the belt is not within specifications, go to step 5. If the belt is within specifications, go to step 9.
5. Loosen the adjusting arm pivot screw, alternator pivot screw, and alternator adjusting screw.
6. While prying the alternator outward, tighten the alternator screw.
8. Recheck and adjust the belt tension as necessary.
9. Replace the belt guard.
10. Reconnect the generator set engine starting battery, negative (–) lead last.

Belt Type	Deflection mm (in.)	Force (kgf) N
New	(7–9) 0.3–0.4	(10) 98
Used	(10–15) 0.4–0.6	(10) 98

Figure 5-6 Belt Specifications

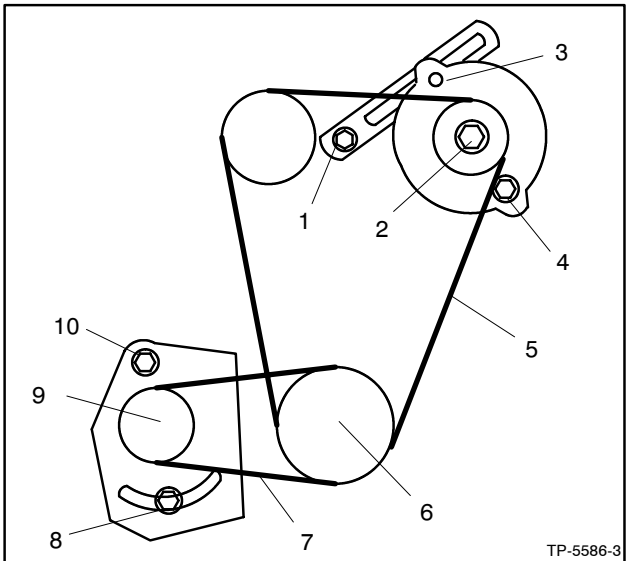

1. Adjusting arm pivot screw
2. Battery charging alternator pulley
3. Adjusting screw
4. Alternator pivot screw
5. Check alternator belt tension here
6. Crankshaft pulley
7. Check seawater pump belt tension here
8. Adjusting screw
9. Seawater pump pulley
10. Pivot screw

Figure 5-7 Belt Tension, Typical

when the engine exhaust manifold outlet is less than 23 cm (9 in.) above waterline. Check the siphon break at the interval listed in the service schedule. Use the following procedure and Figure 5-8 to ensure correct functioning of the siphon break.

Siphon Break Inspection Procedure

1. Stop the generator set.
2. Remove the retaining cap and the reed valve for inspection. See Figure 5-8.
5. Replace the siphon break if it is cracked or if the reed valve material has hardened or deteriorated.
6. Install the reed valve downward into the mounting base.
7. Install the retaining cap and finger-tighten only. Do not overtighten.

Note: Consult the installation manual for a complete explanation of the dimensions and other installation considerations.

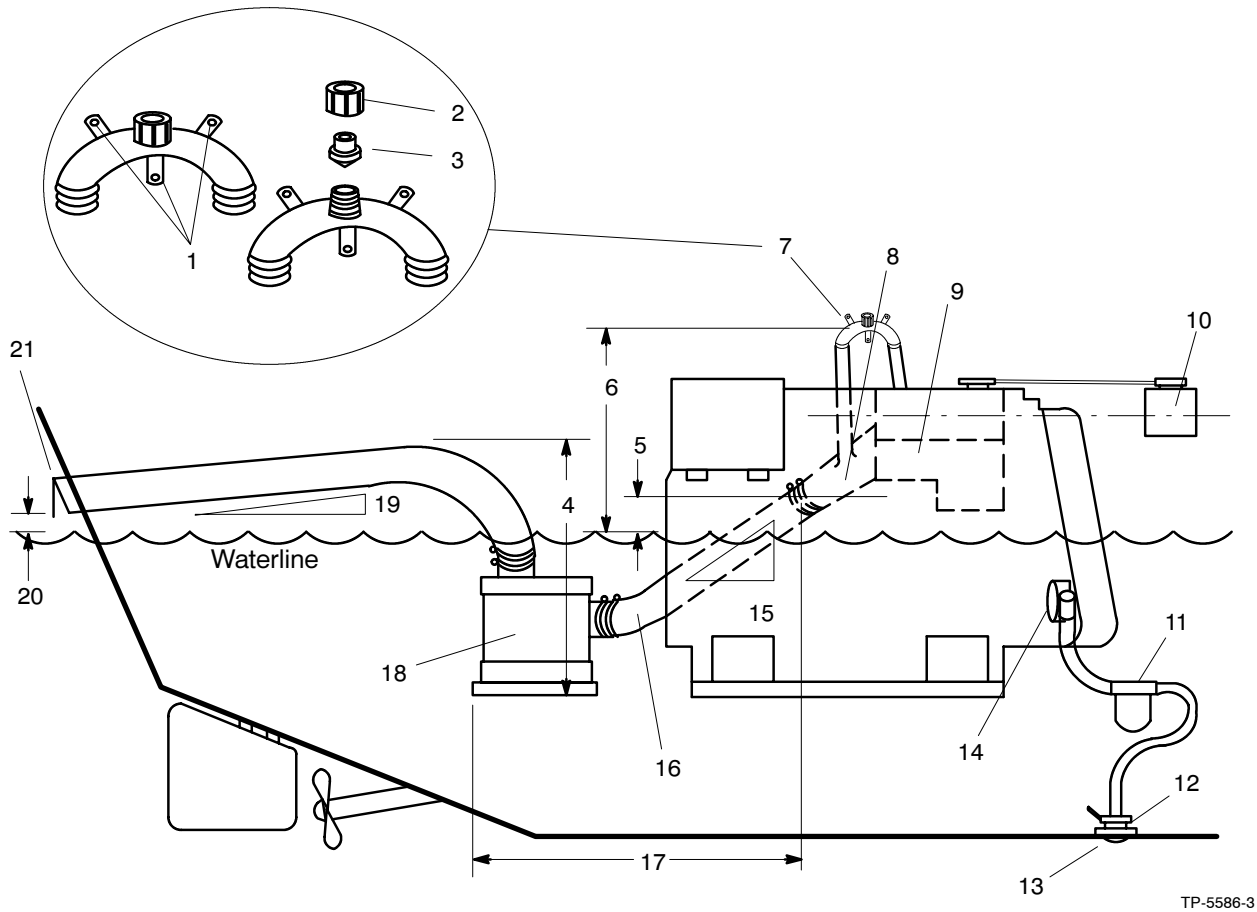

1. Mounting holes
2. Retaining cap
3. Reed valve assembly
4. Silencer vertical lift 1.2 m (4 ft.) max.
5. Exhaust mixer elbow distance above waterline. If less than 23 cm (9 in.), a siphon break is required.
6. Siphon break distance above waterline 30.5 cm (1 ft.) min.
7. Siphon break
8. Exhaust mixer elbow
9. Heat exchanger (locations vary by model)
10. Coolant recovery tank (locations vary by model)
11. Seawater strainer
12. Seacock
13. Intake strainer
14. Engine-driven seawater pump
15. Exhaust hose pitch 1.3 cm per 30.5 cm (0.5 in. per ft.) min.
16. Water lock (optional)
17. Silencer distance from exhaust mixer elbow 3 m (10 ft.) max.
18. Silencer (customer-supplied)
19. Exhaust hose pitch 1.3 cm per 30.5 cm (0.5 in. per ft.) min.
20. Exhaust outlet distance above waterline 10 cm (4 in.) min.
21. Seawater outlet

Figure 5-8 Siphon Break, Plastic “U” Type

anode (plug) to prevent electrolytic corrosion of generator components by seawater.

Check and replace the zinc anode at intervals recommended by the operation manual's service schedule.

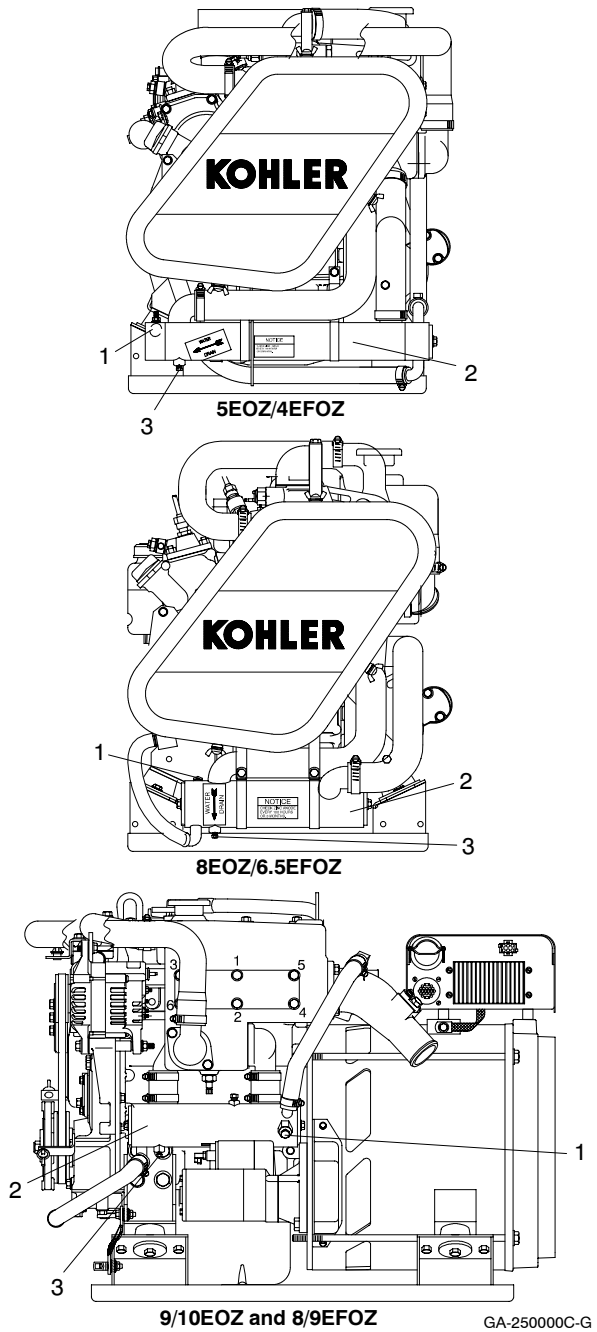

1. Anticorrosion zinc anode (seawater drain)
2. Heat exchanger
3. Coolant drain

Figure 5-9 Anticorrosion Zinc Anode

remove the zinc plug from the heat exchanger, and drain the coolant into a container.

2. Remove the corrosion on the zinc anode. Replace the anode when the percent of the zinc remaining is less than 50% of the length and diameter shown in Figure 5-10.

3. Clean the threaded opening of the heat exchanger and coat the threads of the zinc anode with pipe sealant.

4. Install the zinc anode into the heat exchanger.

5. Open the seacock.

6. Refill the cooling system.

7. Start the generator set and check for leaks at the zinc anode's location. The pump is operating if cooling water flows from the exhaust outlet. If water is not discharging at the exhaust outlet stop the generator set. For seawater pump priming see the Prestart Checklist in the operation manual.

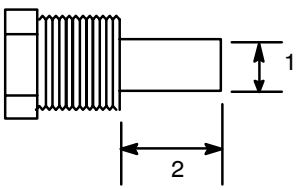

1. Diameter: 9 mm (0.34 in.)
2. Length: 43 mm (1.7 in.)

Figure 5-10 Anticorrosion Zinc Anode (Plug)

6.1 General

The following section covers the controller troubleshooting procedure for generator sets equipped with the relay controller and related engine components. Refer to Figure 6-1 to identify the controller components.

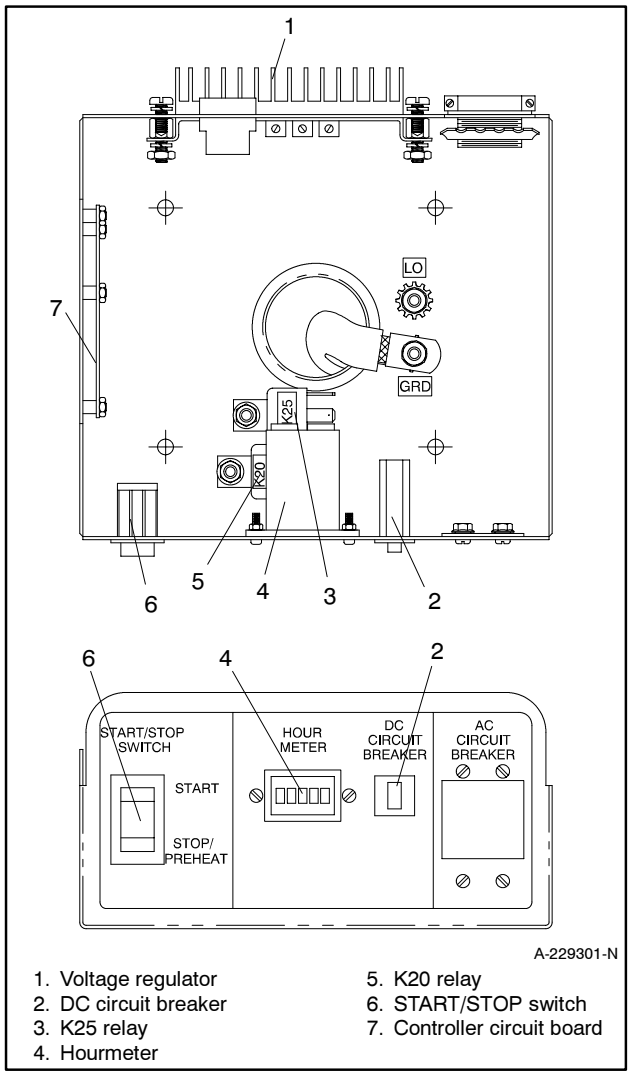

Figure 6-1 Controller Internal Components

6.2 Controller Sequence of Operation

The following text covers the controller's sequence of operation during generator start, run, stop, and fault shutdown modes. Use this as a starting point for controller fault identification. Use the LEDs on the controller circuit board to assist in the troubleshooting process. An illuminated LED indicates that the respective relay is receiving power; the LED does not indicate whether that relay is energized. Additional relay test procedures are covered later in this section. Refer to the wiring diagrams in Section 10, Voltage Reconnection and Wiring Diagrams, to assist in the troubleshooting procedure.

6.2.1 Start

Close the start/stop switch between N (ground) and 47 (local or remote starting).

The K2 relay energizes. The normally open K2 contacts close to energize the K3 relay (LED3 lights), the K25 (fuel solenoid) relay, the controller hourmeter, and the generator armature exciter field.

The K25 relay normally open contacts close to energize the fuel solenoid.

The K3 relay normally open contacts close to energize the K20 (starter) relay. The K20 relay normally open contacts close to energize the S relay (starter solenoid). The S relay normally open contacts close to energize the starter motor.

6.2.2 Run

The B1 and B2 windings of the stator supply AC voltage to the bridged rectifier (BR1), the K1 relay energizes (LED1 lights). After a 5–10 second time delay, the K5 relay energizes (LED5 lights).

Note: Voltage to the K1 and K5 relays is rectified and regulated at 12 volts DC by the bridge rectifier (BR1) and the voltage regulator (VR1).

Stator winding 33–34 provides a voltage sensing source to the voltage regulator (PBIIIE).

The normally open K1 contacts close to maintain voltage to the K2 relay (LED2 remains lit).

The normally open K2 contacts remain closed to maintain voltage to the fuel solenoid and the controller hourmeter.

light.

The normally open K5 contacts close to permit the high water temperature (HWT), high exhaust temperature (HET), and low oil pressure (LOP) switches to function.

Note: The low oil pressure (LOP) switch contacts open when the engine develops oil pressure.

One set of normally closed K1 contacts opens to disconnect the circuit to the positive (+) connection of the exciter fields (field flashing).

A set of normally closed K1 contacts opens to disconnect the circuit to the negative (–) connection of the exciter field (field flashing). The normally closed K1 contacts open to deenergize the K3 relay (LED3 goes out) and prevent accidental reenergizing of the starter motor. The K3 contacts open to deenergize the K20 relay. The K20 contacts open to deenergize the S relay. The S contacts open to deenergize the starter motor.

When the generator set is running, the start switch contacts N and 47 open by releasing the start/stop rocker switch.

6.2.3 Stop

Close the start/stop switch between N and 43 (local or remote).

The K4 relay energizes (LED4 lights).

The normally closed K4 contacts open to deenergize the K25 relay. The K25 normally open contacts open to deenergize the fuel solenoid.

The normally open K4 contacts close to maintain ground to the K4 relay.

As the generator set shuts down, the K1 relay deenergizes (LED 1 goes out). The normally open K1 contacts open to deenergize the K2 relay (LED 2 goes out). The normally closed K2 contacts close to ground the circuit to the K4 relay until the generator set comes to a complete stop.

6.3.1 Low Oil Pressure (LOP) Shutdown

When low oil pressure occurs, the LOP shutdown switch contacts close and energize the K4 relay (LED4 lights).

Note: During cranking the low oil pressure shutdown switch is deactivated until the K5 relay energizes. This delay allows the engine to reach normal operating oil pressure. The normally closed LOP contacts open when the generator set develops adequate oil pressure.

The normally closed K4 contacts open to deenergize the K25 relay. The K25 normally open contacts open to deenergize the fuel solenoid.

The normally open K4 contacts close to maintain ground to the K4 relay.

As the generator set shuts down, the K1 relay deenergizes (LED1 goes out). The normally open K1 contacts open to deenergize the K2 relay (LED2 goes out). The normally closed K2 contacts close to ground the circuit to the K4 relay until the generator set comes to a complete stop.

6.3.2 High Water Temperature (HWT) and High Exhaust Temperature (HET) Shutdown Switch

When a high temperature is encountered at one (or both) of these sources, the shutdown switch contacts close and energize the K4 relay (LED4 lights).

The normally closed K4 contacts open to deenergize the K25 relay. The K25 normally open contacts open to deenergize the fuel solenoid.

The normally open K4 contacts close to maintain ground to the K4 relay.

As the generator set shuts down, the K1 relay deenergizes (LED1 goes out). The normally open K1 contacts open to deenergize the K2 relay (LED2 goes out). The normally closed K2 contacts close to ground the circuit to the K4 relay until the generator set comes to a complete stop.

	(see relay schematic)	scale	High resistance, open coil.
K2 Relay Coil	K2 coil terminals (see relay schematic)	Ohmmeter on R x 10 scale	If functional, approximately 270 ohms. Low resistance (continuity), shorted coil. High resistance, open coil.
K3 Relay Coil	K3 coil terminals (see relay schematic)	Ohmmeter on R x 10 scale	If functional, approximately 400 ohms. Low resistance (continuity), shorted coil. High resistance, open coil.
K4 Relay Coil	K4 coil terminals (see relay schematic)	Ohmmeter on R x 10 scale	If functional, approximately 125 ohms. Low resistance (continuity), shorted coil. High resistance, open coil.
K5 Relay Coil	K5 coil terminals (see relay schematic)	Ohmmeter on R x 10 scale	If functional, approximately 510 ohms. Low resistance (continuity), shorted coil. High resistance, open coil.

Figure 6-2 Relay Testing

6.4 Controller Circuit Board

Some controller circuit board components can be tested without removing the component from the circuit board. Perform these checks prior to installing a new circuit board and attempting startup. Use a high-quality multimeter and follow the manufacturer's instructions. To obtain accurate readings when testing, remove all the circuit board connectors and conformal coating (transparent insulation) from component terminals. Use the chart in Figure 6-2 and the controller circuit board illustration in Figure 6-3.

The controller circuit board has light-emitting diodes (LEDs) which indicate relay coil power and aid in the circuit board and the generator fault detection. When the K1, K2, K3, K4, or K5 relays receive power the corresponding LED lights. The LED does not indicate whether the relay coil is energized. Determine if the relay coil is energized by analyzing the generator faults when performing a continuity test on the relay coil.

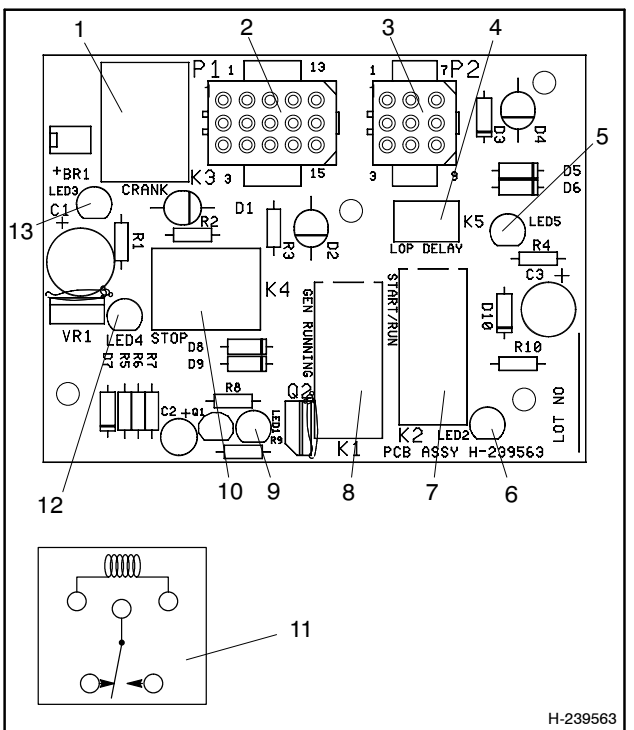

1. Engine crank control relay (K3)
2. P1 connector
3. P2 connector
4. Time delay relay (K5)
5. LED5
6. LED2
7. Engine run relay (K2)
8. AC crank disconnect relay (K1)
9. LED1
10. Fault shutdown relay (K4)
11. Relay schematic
12. LED4
13. LED3

Figure 6-3 Controller Circuit Board

the main circuit board and the entire generator set. If the circuit board may have to be replaced.

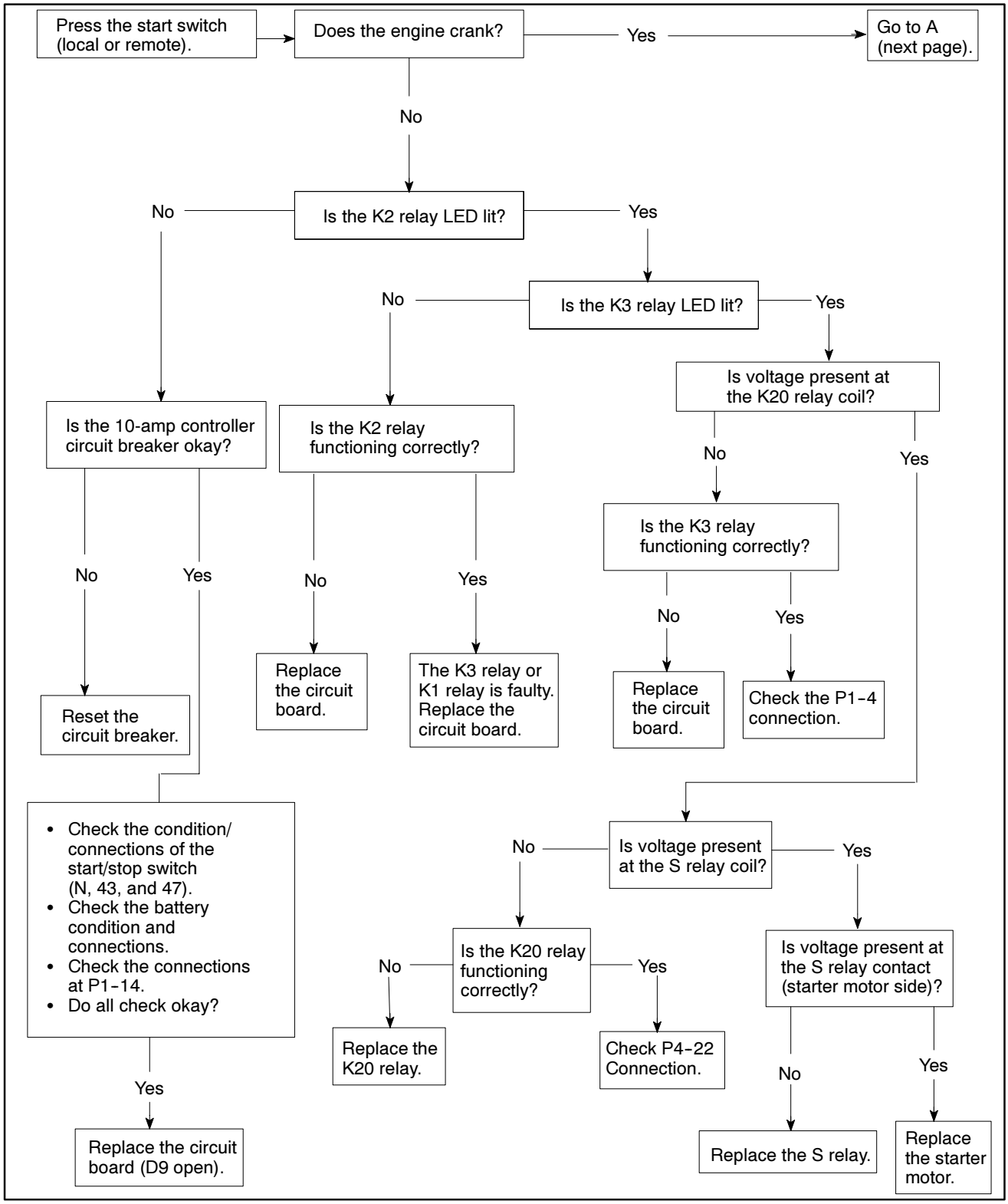

Figure 6-4 Troubleshooting Relay Controller Circuit Board (1 of 4)

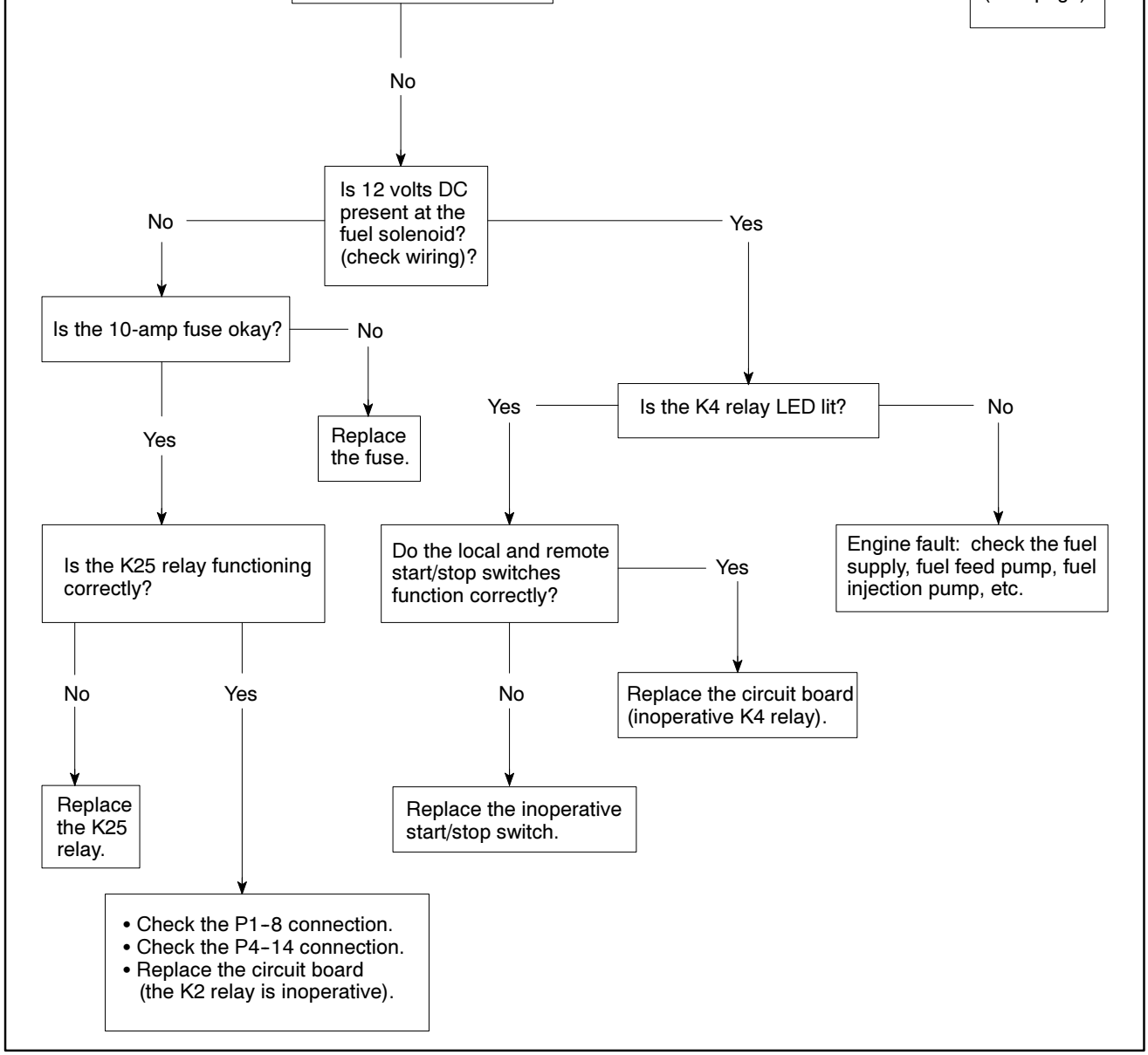

Figure 6-5 Troubleshooting Relay Controller Circuit Board (2 of 4)

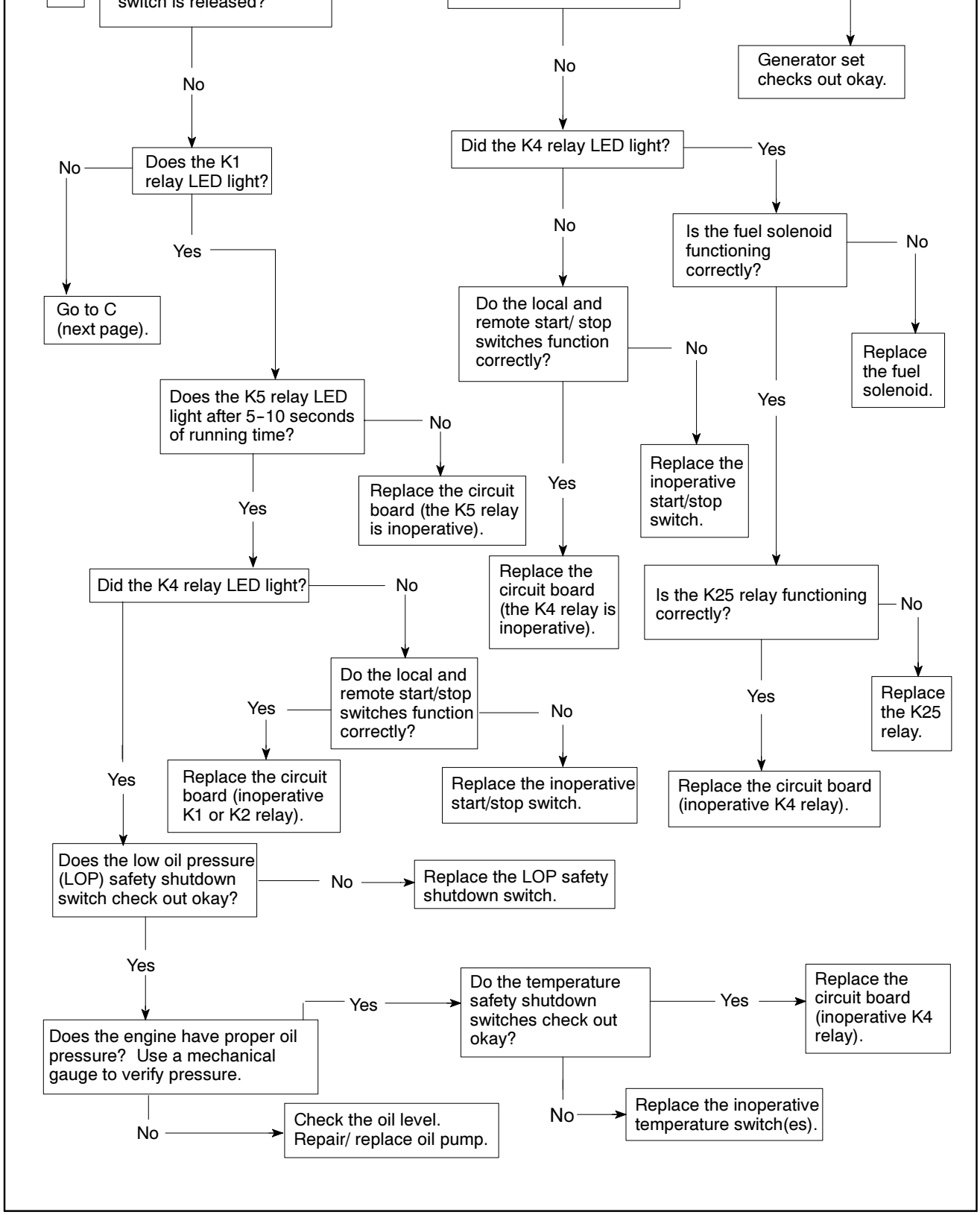

Figure 6-6 Troubleshooting Relay Controller Circuit Board (3 of 4)

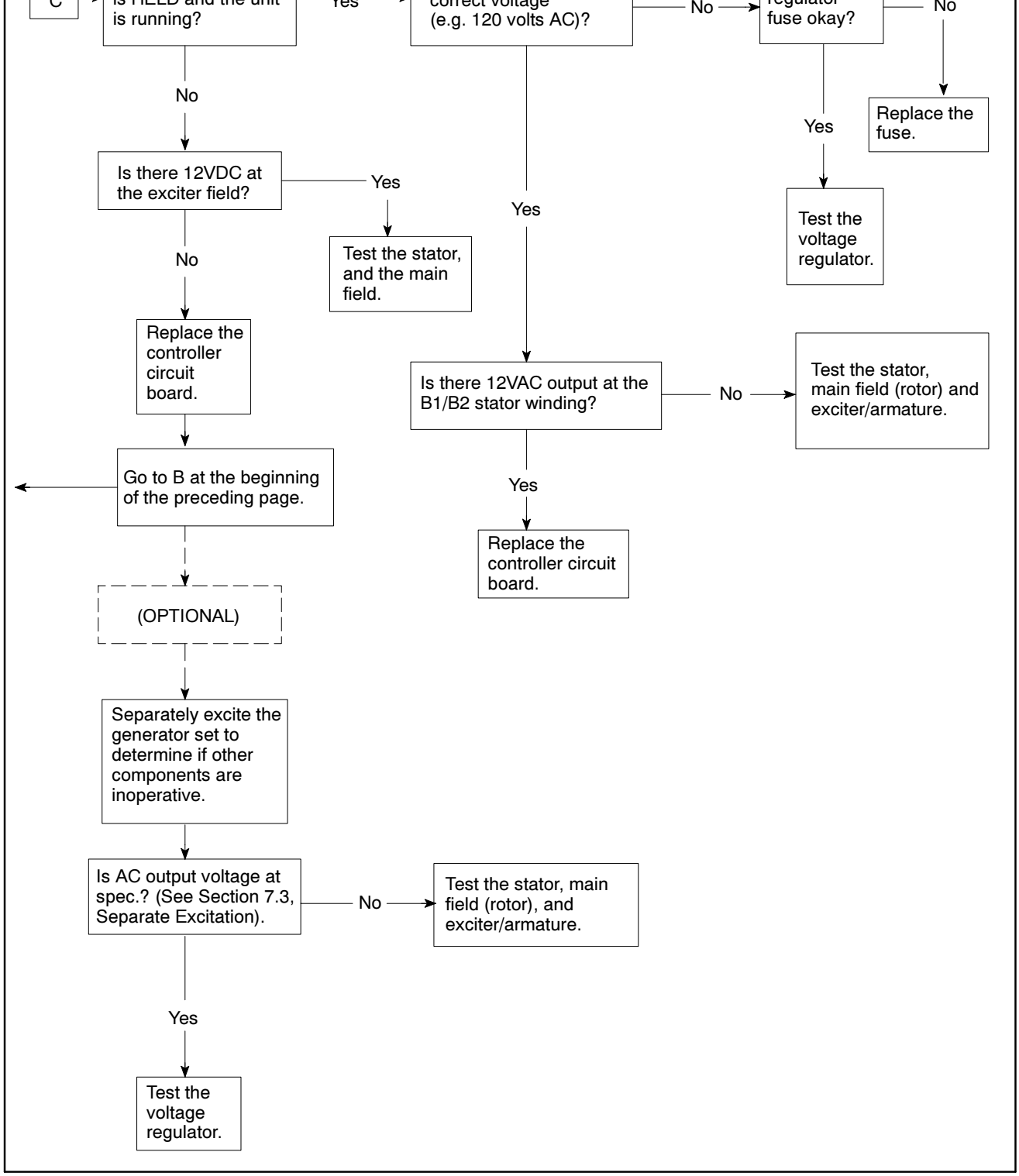

Figure 6-7 Troubleshooting Relay Controller Circuit Board (4 of 4)

7.1 General

Before beginning the following troubleshooting procedures, read all the safety precautions at the beginning of this manual. The following tests include additional safety precautions; OBSERVE THESE PRECAUTIONS!

⚠ WARNING

Hazardous voltage. Moving rotor. Can cause severe injury or death.

Operate the generator set only when all guards and electrical enclosures are in place.

Testing the voltage regulator. Hazardous voltage can cause severe injury or death. High voltage is present at the voltage regulator heat sink. To prevent electrical shock do not touch the voltage regulator heat sink when testing the voltage regulator.
(PowerBoost™, PowerBoost™ III, and PowerBoost™ V voltage regulator models only)

Grounding electrical equipment. Hazardous voltage can cause severe injury or death. Electrocution is possible whenever electricity is present. Open the main circuit breakers of all power sources before servicing the equipment. Configure the installation to electrically ground the generator set, transfer switch, and related equipment and electrical circuits to comply with applicable codes and standards. Never contact electrical leads or appliances when standing in water or on wet ground because these conditions increase the risk of electrocution.

High voltage test. Hazardous voltage can cause severe injury or death. Follow the instructions of the test equipment manufacturer when performing high-voltage tests on the rotor or stator. An improper test procedure can damage equipment or lead to generator set failure.

Short circuits. Hazardous voltage/current can cause severe injury or death. Short circuits can cause bodily injury and/or equipment damage. Do not contact electrical connections with tools or jewelry while making adjustments or repairs. Remove all jewelry before servicing the equipment.

7.2 General Troubleshooting

To determine the cause of no- or low-AC output , refer to the following steps and the troubleshooting flow chart (Figure 7-1).

General Troubleshooting Procedure

1. Check the condition of the voltage regulator's 8-amp fuse.
2. If the fuse is functional, separately excite the generator. (See Section 7.3.) The separate excitation test duplicates the role of the voltage regulator by providing excitation current to the rotor.

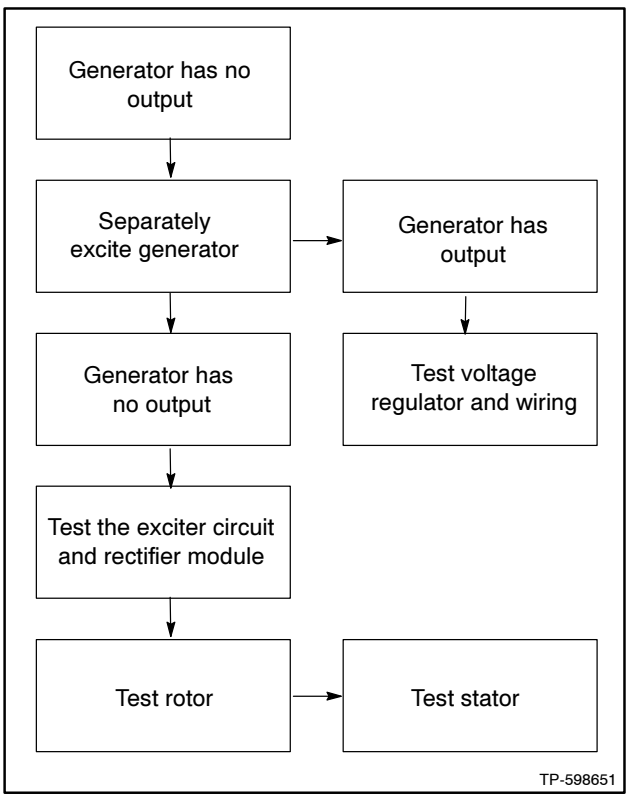

Figure 7-1 General Troubleshooting

presence of a faulty voltage regulator, it is possible to determine if a running fault exists in the rotor and/or stator. A generator component that appears functional while static (stationary) may exhibit a running open or short circuit while dynamic (moving). Centrifugal forces acting on the windings during rotation or insulation breakdown as temperatures increase can cause short circuits.

Separate Excitation Procedure

1. Disconnect all the leads from the voltage regulator.
2. Disconnect the P10 (F1, F2) connector.
3. Connect a separate excitation circuit as shown in Figure 7-2. Connect an ammeter and a 10-amp fuse in series with F1. Note and record the ammeter reading.
4. The approximate ammeter reading should equal battery voltage divided by the specified exciter resistances (cold). Disconnect the resistor leads and determine the resistance value using an ohmmeter. See Section 1, Specifications, for the correct values.

Example:

$$\frac{\text{12 Volts (Battery Voltage)}}{\text{3.5 Ohms Exciter Resistance}} = \text{3.4-amp Exciter Current}$$

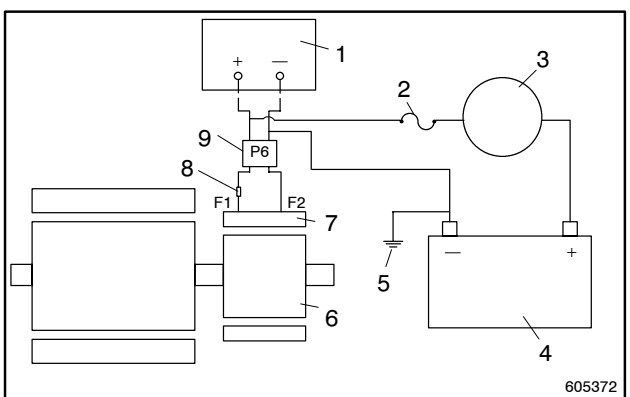

1. Voltage regulator
2. 10-amp fuse
3. DC ammeter
4. Battery
5. Ground to generator frame
6. Exciter armature
7. Exciter field
8. 10- or 15-ohm resistor
9. P6 connector (disconnect P6 connector before separate excitation)

Figure 7-2 Separate Excitation Connections

reading to zero or unstable reading, suggests a running open in the rotor. If the ammeter is stable, continue with step 6.

6. Check for AC output across the stator leads and compare the measured output to the values in Section 1, Specifications. If the output varies considerably from those listed, a faulty stator, rotor, rectifier module, or armature is the likely cause.

Note: See Section 1, Specifications, for the stator output voltages (with separately excited generator). These specifications are based on a battery of 12 volts. Should the battery voltage vary, the resulting stator output values will also vary.

If there is no generator output during normal operation but output is available when the generator set is separately excited, the voltage regulator is probably inoperative.

7.4 PowerBoost IIIE Voltage Regulators

The generator set is equipped with a PowerBoost™ IIIE voltage regulator. See Figure 7-3.

The voltage regulator monitors the output voltage to the generator exciter field.

If the regulator's 8-amp fuse blows, the generator set will shut down. Verify that the regulator fuse is functional before proceeding with the test.

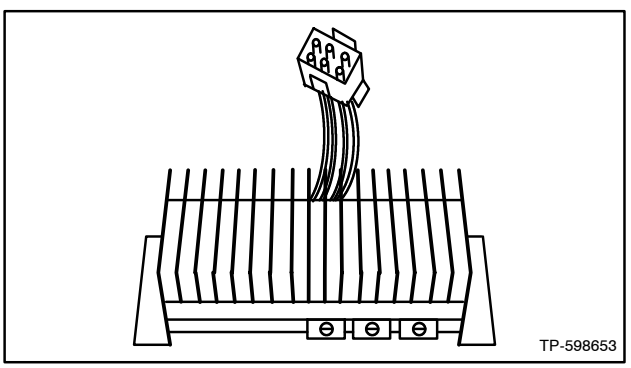

Figure 7-3 PowerBoost™ IIIE Voltage Regulator

voltage should decline. Perform the following test to check the regulator output.

Use the following components to test the voltage regulator:

- Variable transformer, 0–140 volts, 0.5-amp minimum
- Plug, 120 volts AC
- Lamp, 120 volt, 100 watt
- AC voltmeter
- Insulated copper wire, #14 AWG, minimum

Regulator Test Procedure

1. Connect the components as shown in Figure 7-4.

2. Turn the variable transformer setting to zero. Plug in the variable transformer.

3. Turn the variable transformer on. Slowly increase the variable transformer voltage to 100 volts. The test lamp should light. If the lamp does not light, turn the voltage adjustment potentiometer (pot) clockwise. If the lamp still does not light, the voltage regulator is inoperative. Replace the voltage regulator. An inoperative voltage regulator causes a generator no/low-output condition.

4. Slowly increase the voltage to 120 volts. The lamp should go out and stay out as the voltage increases. If the lamp remains lit, turn the voltage adjustment pot counterclockwise. If the lamp still remains lit, replace the voltage regulator. An inoperative voltage regulator causes a generator high voltage output condition.

5. Turn the variable transformer to zero and unplug the AC cord.

   Note: For applications requiring fine voltage adjustment, connect a remote rheostat to voltage regulator terminal 66.

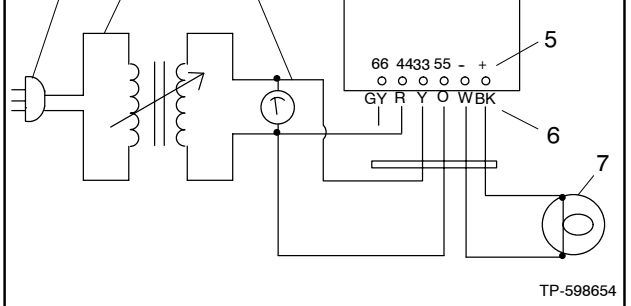

1. 120 volts AC
2. Variable transformer
3. AC voltmeter
4. Voltage regulator PowerBoost™ IIIE
5. Stator/rotor connections (for reference only)
6. Lead color
7. 120 volt, 100 watt lamp

Figure 7-4 PowerBoost™ IIIE Voltage Regulator Test

7.4.2 Voltage Regulator Adjustment

Kohler Co. sets the voltage regulator and, under normal circumstances, the regulator requires no further adjustment. However, if the voltage regulator has been replaced or tampered with, or if voltage/frequency reconnection has been done, readjust the voltage regulator according to the following procedure. The following paragraphs describe the voltage regulator components.

Voltage Adjustment Pot adjusts the generator output within the range of 100–130 volts.

Stabilizer Pot fine-tunes regulator circuitry to reduce light flicker.

Volts/Hz Pot adjustment determines the engine speed (Hz) at which the generator output voltage begins to drop.

Note: The **volts/Hz** adjustment does not apply to the following models: 4/6.5/8/9EFOZ and 5/8/9/10EOZ. On these models, turn the volts/Hz adjustment pot full counterclockwise to stop and seal. No further volts/Hz adjustments are required.

2. Turn the remote rheostat, if equipped, to the midpoint. Turn the **voltage** and **stability pots** fully counterclockwise. Connect the voltmeter to the AC circuit or an electrical outlet.

3. Start the generator set.

4. Adjust the engine speed to 1800 rpm on 60 Hz units and 1500 rpm on 50 Hz units.

5. Rotate the **voltage adjustment pot** clockwise to increase the voltage or counterclockwise to decrease the voltage to achieve the desired output voltage.

6. Rotate the **stability pot** clockwise until the light flickers minimally.

7. Readjust the **voltage adjustment pot** to achieve the desired output voltage.

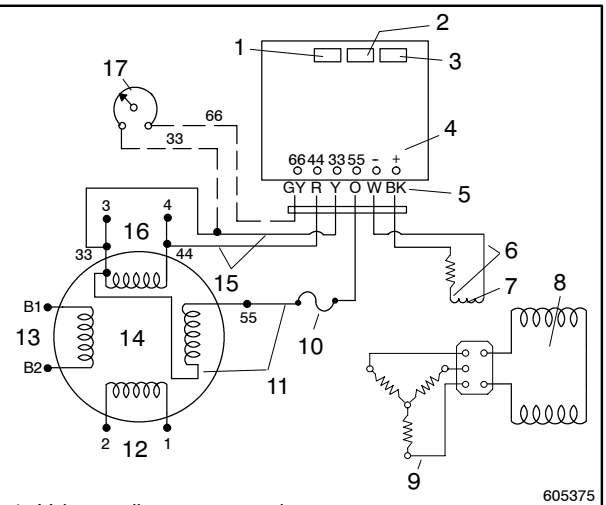

1. Voltage adjustment potentiometer
2. Stabilizer potentiometer
3. Volt/Hz potentiometer
4. Exciter connections (for reference only)
5. Lead color
6. DC output
7. Exciter
8. Rotor
9. Armature
10. 8-amp fuse
11. AC power input (aux.)
12. Main (2 and 1)
13. Control
14. Stator
15. Sensing
16. Main (3 and 4)
17. Remote rheostat (optional)

Figure 7-5 PowerBoost™ IIIE Voltage Regulator Adjustment

9. Stop the generator set.

7.5 Exciter Field

DC current from the battery magnetizes the exciter field. When the exciter armature rotates within the magnetized exciter field windings, an electrical current develops within the exciter armature. There will be low or no generator output if the exciter field is inoperative. Test the exciter field according to the following procedure.

Exciter Field Test Procedure

1. Place the start/stop switch in the STOP position.

2. Disconnect the generator set engine starting battery, negative (-) lead first.

3. Disconnect the P6 and P7 connectors.

4. Check the exciter field resistance by connecting an ohmmeter across exciter field FP and FN leads. See Section 1, Specifications, for the resistance reading of a cold exciter field. A low reading indicates an internal short and a high reading indicates an open winding. Repair or replace the exciter field if the ohmmeter readings indicate a inoperative exciter field. If the resistance test proves inconclusive, perform a megohmmeter test on the exciter field as described in the next step.

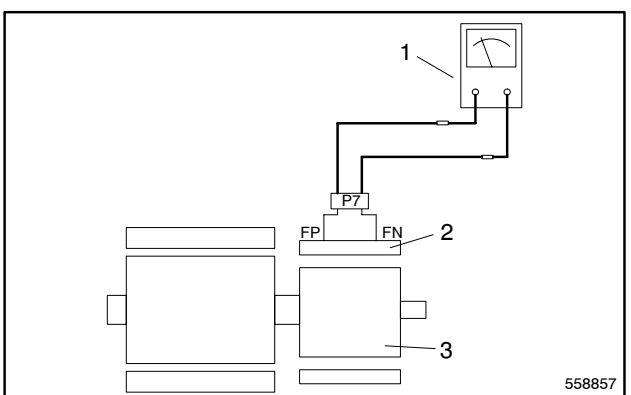

1. Ohmmeter
2. Exciter field
3. Exciter armature

Figure 7-6 Exciter Field Resistance Check

the instructions of the megohmmeter manufacturer when performing this test. A reading of approximately 500 kOhms (1/2 megohm) and higher indicates the field winding is functional. A reading of less than approximately 500 kOhms indicates deterioration of the winding insulation and possible current flow to ground. Repair or replace the exciter field.

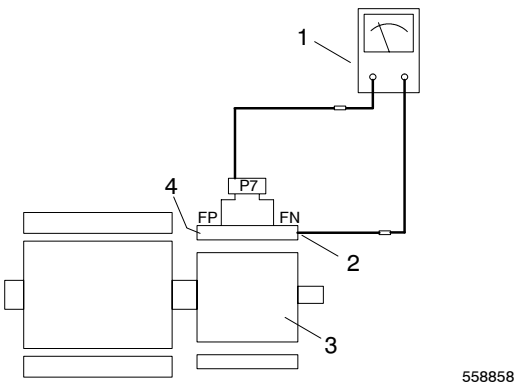

1. Ohmmeter
2. Frame connection
3. Exciter armature
4. Exciter field

Figure 7-7 Megohmmeter Connections on the Exciter Field

7.6 Exciter Armature

The exciter armature supplies excitation current to the generator main field through the rectifier module. There will be low or no generator output if the exciter armature is inoperative. Test the exciter armature as described in the following steps. Disassemble the generator set prior to performing this test.

Exciter Armature Test Procedure

1. Disassemble the alternator.

2. Disconnect the armature leads from the rectifier module AC terminals.

3. With an ohmmeter on the R x 1 scale, check the resistance across the exciter armature leads. See Figure 7-8. The armature resistance should be 0.6–0.8 ohms (continuity). No continuity indicates an open armature winding. Replace the armature.

4. Perform a megohmmeter test on the exciter armature as described in the next step. Consider the exciter armature good if the resistance reading (continuity) is low and there is no evidence of a shorted winding (heat discoloration).

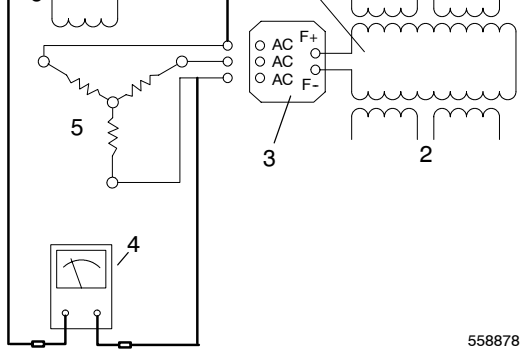

1. Main field (rotor)
2. Stator windings
3. Rectifier module
4. Ohmmeter
5. Armature
6. Exciter field

Figure 7-8 Exciter Armature Ohmmeter Test

5. Check if the exciter armature winding is ground. Use a megohmmeter to apply 500 volts DC to either armature lead and the armature frame. Follow the instructions of the megohmmeter's manufacturer when performing this test. See Figure 7-9. A reading of approximately 500 kOhms (1/2 megohm) and higher indicates that the exciter armature is functional. A reading of less than approximately 500 kOhms indicates deterioration of the winding insulation and possible current flow to ground. Repair or replace the exciter armature.

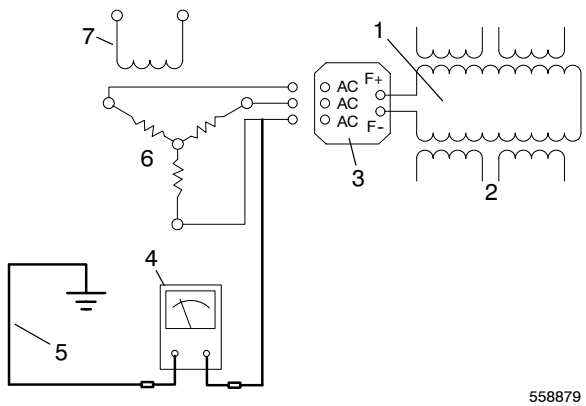

1. Main field rotor
2. Stator windings
3. Rectifier module
4. Ohmmeter
5. Shaft connection
6. Armature
7. Exciter field

Figure 7-9 Megohmmeter Connections on Exciter Armature

armature and the main field, converts the AC from the exciter armature to DC which magnetizes the generator main field. Test the rectifier module as described in the following steps.

Rectifier Module Test Procedure

1. Disconnect the exciter armature and the main field leads from the rectifier module.

2. Use an ohmmeter on the R x 100 scale to check the resistance between the rectifier diodes as shown in Figure 7-10. The ohmmeter should show resistance in one direction and, upon reversing the ohmmeter leads, a high resistance in the other direction. Replace the rectifier module if any of the diodes tests differently than described.

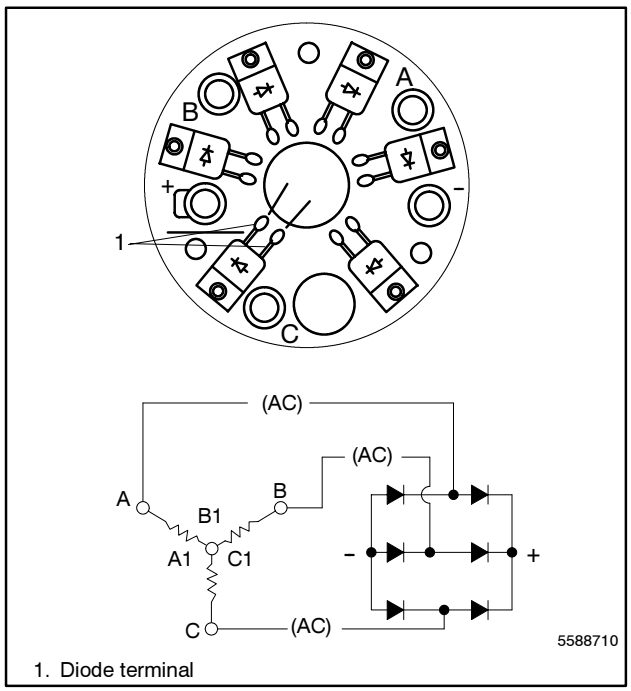

Figure 7-10 Testing Rectifier Module

rectifier module) rotating within the stator windings induces AC voltage in the stator windings. Test the generator rotor (main field) as described in the following steps.

Rotor Test Procedure

1. Disassemble the generator.

2. Disconnect the generator main field windings from rectifier module terminals F+ and F−.

3. Check the main field resistance by connecting an ohmmeter across the main field F+ and F− leads. See Figure 7-11. The resistance reading for a cold main field should be approximately 2.5–4.5 ohms. A low reading indicates an internal short and a high reading indicates an open winding. Replace the main field if the ohmmeter readings indicate that the main field is inoperative.

4. Perform a megohmmeter test on the main field as described in the next step.

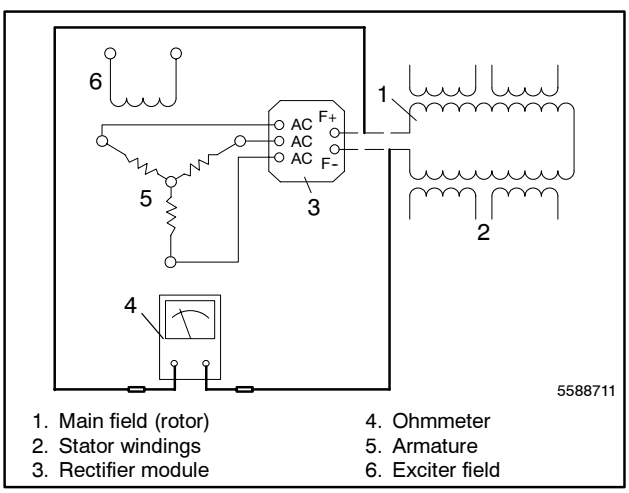

Figure 7-11 Ohmmeter Connections on Main Field

the instructions of the megohmmeter's manufacturer when performing this test. See Figure 7-12. A reading of approximately 500 kOhms (1/2 megohm) and higher indicates the main field is good. A reading of less than approximately 500 kOhms indicates the deterioration of the winding insulation and possible current flow to ground. Repair or replace the main field.

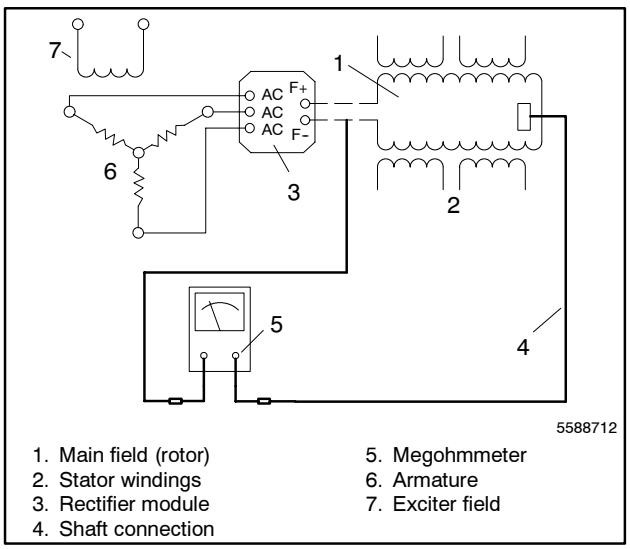

Figure 7-12 Megohmmeter Connections on Main Field

7.9 Stator

The stator consists of a series of coils of wire laid in a laminated steel frame. The stator leads supply voltage to the AC load and exciter regulator.

Leads 1, 2, 3, and 4 are the generator output leads. Leads 33, 44, and 55 are the voltage regulator supply and sensing leads. The output of leads B1 and B2 are rectified by BR1 to supply the control voltage. BR1 is located on the controller circuit board.

Prior to testing, inspect the stator for heat discoloration and visible damage to the housing lead wires or exposed and varnished areas of the frame laminations. Be sure the stator is securely fastened in the stator housing.

The stator produces electrical output (AC) as the magnetized main field rotates within the stator windings. Test the condition of the stator according to the following procedure. Refer to the schematic in Figure 7-13 when performing the following tests.

Section 10, Voltage Reconnection and Wiring Diagrams.

2. Disconnect all the stator leads to isolate the windings. To check the stator continuity, set the ohmmeter on the R x 1 scale. Contact the red and black ohmmeter leads; adjust the ohmmeter to zero ohms. Check the stator continuity by connecting the meter leads to the stator leads as shown in Figure 7-13. Perform the stator tests on all the stator windings. See Figure 7-14.

3. Contact the ohmmeter leads and readjust the ohmmeter to zero ohms. Check the cold resistance of the stator windings by connecting the meter leads to the stator leads 1 and 2, 3 and 4, B1 and B2, etc. See Section 1, Specifications, for the stator resistance values. Replace the stator if readings do not fall within the specified value.

Note: The stator resistance will vary directly with increased temperature.

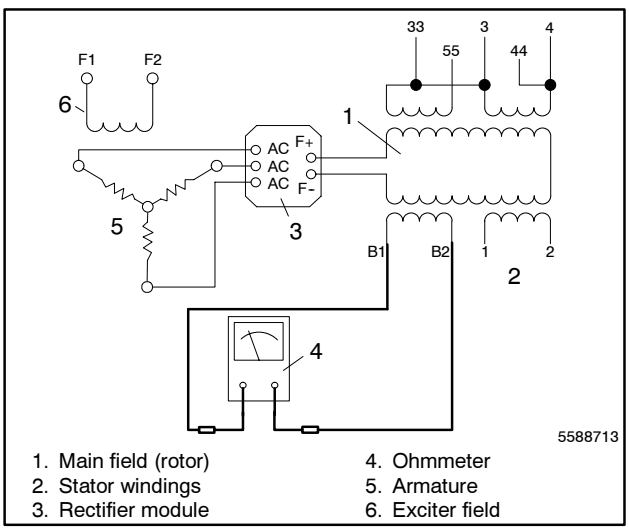

Figure 7-13 Stator Ohmmeter Connections

Between Leads	Continuity
1 and 2	Yes
3 and 4	Yes
33 and 44	Yes
33 and 55	Yes
B1 and B2	Yes
1 and 3, 4, 33, 44, 55	No
1 and 55, B1, and B2	No
4 and B1 and B2	No
55 and B1 and B2	No
Any stator lead and ground	No

Figure 7-14 Stator Continuity

and there is no evidence of shorted windings (heat discoloration).

Note: When taking an ohmmeter reading using lead 55, make the connection prior to the in-line fuse.

5. Check the stator for a short to ground using a megohmmeter. Apply 500 volts DC to any stator lead from each winding and the stator frame. Follow the instructions of the megohmmeter manufacturer when performing this test. Repeat the test on the other leads until all the stator windings have been tested. A reading of approximately 500 kOhms (1/2 megohm) and higher indicates the stator is good. A reading of less than approximately 500 kOhms indicates deterioration of the winding insulation and possible current flow to ground. Repair or replace the stator.

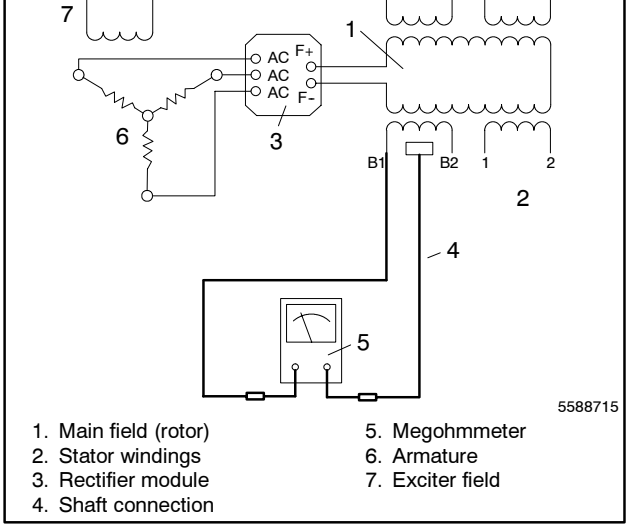

1. Main field (rotor)
2. Stator windings
3. Rectifier module
4. Shaft connection
5. Megohmmeter
6. Armature
7. Exciter field

Figure 7-15 Megohmmeter Connections on Stator

8.1 General

See Figure 8-1 through Figure 8-3 for component testing. With the generator set battery connected, check the generator wiring harness and the components listed in the following tables. Check each component using a multimeter to verify that the switches function and that voltage is present at each component.

Short circuits. Hazardous voltage/current can cause severe injury or death. Short circuits can cause bodily injury and/or equipment damage. Do not contact electrical connections with tools or jewelry while making adjustments or repairs. Remove all jewelry before servicing the equipment.

WARNING

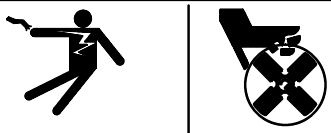

Hazardous voltage. Moving rotor. Can cause severe injury or death.

Operate the generator set only when all guards and electrical enclosures are in place.

Component	Voltmeter Connections	Procedure	Results
Hourmeter and wiring	Connect the red test lead to the hourmeter positive (+) terminal. Connect the black test lead to the hourmeter negative (–) terminal.	Set the voltmeter to 12 volts DC or greater. Start the generator set.	A 12 volt DC reading indicates the wiring harness is functional.
	None (see Procedure).	Disconnect the hourmeter leads and apply 12 volts DC to the hourmeter. The hourmeter is polarity sensitive.	If functional, hourmeter operates.
Stator auxiliary winding B1 and B2	Connect the AC voltmeter leads to the B1 and B2 windings at connector P11.	Stop the generator set. Connect a voltmeter to the B1 and B2 windings. Crank the generator set and allow the set to reach rated its speed.	A reading of 12–15 volts AC indicates a functional B1/B2 winding.

Figure 8-1 Engine/Generator Component Testing, Relay Controller

ohmmeter to check the continuity of the components and to isolate inoperative components. Refer to Figure 8-2 and Figure 8-3.

Component	Ohmmeter Connections	Procedure	Results
Start/stop switch	Connect the ohmmeter to the P2-6 and P2-4 leads.	Place the ohmmeter on the R x 1000 scale. Place the rocker switch in the START position.	If the switch is functional, zero ohms continuity. Any resistance other than zero or very low ohms, replace the switch.
	Connect the ohmmeter to the P2-6 and P2-5 leads.	Place the ohmmeter on the R x 1000 scale. Place the rocker switch in the STOP position.	If the switch is functional, zero ohms continuity. Any resistance other than zero or very low ohms, replace the switch.
K20 relay coil and wiring	Connect the ohmmeter to the P1-4 and P1-9 leads.	Place the ohmmeter on the R x 1 scale.	If functional, 85 ohms. Low resistance, shorted C relay coil and/or wiring. High resistance, open C relay and/or wiring. Replace the controller board.
Starter solenoid (S relay)	Connect the ohmmeter to the P4-22 lead and the battery positive (+) cable. **Note**: The J4 and P4 leads must be disconnected to perform this test.	Place the ohmmeter on the R x 1 scale.	If functional, approximately 0.5–0.6 ohms at 27°C (80°F).
Controller 10-amp circuit breaker and wiring	Connect the ohmmeter to the battery positive (+) cable and the P1-14 lead. **Note**: The J4 and P4 leads must be connected to perform this test.	Place the ohmmeter on the R x 1000 scale.	If functional, zero or very low ohms. No reading (infinity), open circuit or circuit breaker tripped.

Figure 8-2 Engine/Generator Component Testing, Relay Controller

	connectors and connect the ohmmeter to P10-1 and P10-2 leads.	R x 1 scale.	match those specified in Section 1, Specifications, the rotor is functional. Low resistance, rotor windings shorted. High resistance, rotor windings open.
B1/B2 stator windings	Connect the ohmmeter to the P11-1 and P11-2 leads. **Note**: Disconnect P11 and J11 to perform this test.	Place the ohmmeter on the R x 1 scale.	If the resistance readings match those specified in Section 1, Specifications, the B1/B2 windings are functional. Low resistance, B1/B2 windings shorted. High resistance, B1/B2 windings open.
P1 ground connection	Connect the ohmmeter to the P1-9 and ground.	Place the ohmmeter on the R x 1 scale.	If functional, zero ohms (continuity). Any other reading indicates a poor ground connection.
High exhaust temperature (HET), low coolant (LCS) safety shutdown switches	Connect the ohmmeter to the P1-15 and engine block (ground). **Note**: Remove and isolate the LOP switch lead.	Place the ohmmeter on the R x 1000 scale.	If functional, open circuit. Any continuity suggests an inoperative temperature switch(es). Replace the switch(es).
Low oil pressure (LOP) safety shutdown switch	Connect the ohmmeter to the P13-1 and engine block (ground).	Place the ohmmeter on the R x 1000 scale. This test is not conclusive until the temperature shutdown switches are checked.	If functional, zero ohms (continuity). Then, disconnect the LOP switch lead and isolate the terminal. Meter reading should show an open circuit.

Figure 8-3 Engine/Generator Component Testing, Relay Controller

8.2 Remote Panels (Optional)

Kohler Co. offers three remote panels for connection to the generator set:

- A panel with a start/stop switch
- A panel with a start/stop switch and two gauges (engine oil pressure and water temperature)
- A panel with a start/stop switch and four gauges (DC voltmeter, engine oil pressure, water temperature, and hourmeter)

If difficulty with the remote operation occurs, test the switch, gauges, and gauge senders using the following procedures. See Sections 10.5 through 10.7 for wiring diagrams.

Troubleshooting Remote Start Panels

Generally, if the sender changes its resistance values as its respective pressure/temperature changes, it is working correctly. An inoperative sender will either be open or shorted. Refer to Figure 8-4 and Figure 8-5 for resistance values.

2-Meter and 4-Meter Panels	
Temperature	**Resistance**
60°C (140°F)	134.0 ±10 ohms
90°C (194°F)	51.5 ±4 ohms
100°C (212°F)	38.0 ±3 ohms

Figure 8-4 Water Temperature Sender Resistance

2-Meter and 4-Meter Panels	
Pressure	**Resistance**
0 kPa (0 psi)	10 ohms
345 kPa (50 psi)	80 ohms
690 kPa (100 psi)	135 ohms

Figure 8-5 Oil Pressure Sender Resistance

Remote start/stop switch	Remote switch: yellow/red wire terminal and black wire terminal.	Place the ohmmeter on the R x 1 scale. Press the rocker switch to the START position.	Continuity, the switch is functional. Open, replace switch.
	Remote switch: grey/black wire terminal and black wire terminal.	Place the ohmmeter on the R x 1 scale. Press the rocker switch to the STOP position.	Continuity, the switch is functional.
Generator set ON light, gauge lights, DC voltmeter, and hourmeter	Connect the red test lead to P3-4 and black test lead to P3-1.	Place the controller rocker switch to the START position. Stop the generator set when the test is complete. Generator set does not need to be running, just cranking for this test. **Note**: If the hourmeter is not illuminated, test it by connecting it to a 12-volt battery. **Note**: The hourmeter is polarity sensitive.	If 12-volts DC is present and the component does not function after the J3 is connected to the controller P3, replace the component(s).
Water temperature gauge	Connect the red test lead to P3-4 (socket side) and black test lead to P3-2 (socket side).	Start the generator set for the test.	If 0.5–12-volts DC is present and the gauge does not function after the J3 is connected to controller, replace the gauge.
Oil pressure gauge	Connect the red test lead to P3-4 (socket side) and black test lead to P3-3 (socket side).	Start the generator set for the test.	If 0.5–12-volts DC is present and the gauge does not function after the J3 is connected to the controller, replace the gauge.
Note: Check continuity of gauge wiring and extension harness before replacing components.			

Figure 8-6 Remote Start Panels Troubleshooting

9.1 Disassembly

Disconnect all the external connections—battery cables at the battery (negative (–) lead first), AC-output leads in the controller, remote start panel at the controller P3 connector, water line at the seawater pump, fuel line at the fuel pump filter inlet, and exhaust line at the mixing elbow. Observe all the safety precautions listed at the beginning of this manual during the disassembly/reassembly procedures.

Note: Because this manual covers several models, the procedure for disassembly may vary because of product updates and the assembly variations.

Note: The voltage regulator is located in the controller box. Remove the controller cover to service the voltage regulator. Adjustments are possible without removing the voltage regulator from the controller.

1. Remove the end panel from the alternator end of the generator set. See Figure 9-1.
2. Loosen the four screws and lift off the controller cover.
3. Disconnect the P4 (22-pin) connector from J4.
4. Remove the bolt and disconnect the ground strap.

   Note: It is possible to connect the output leads in various positions for different volt configurations. Mark leads 1, 2, 3, and 4 for correct reconnection.

5. Disconnect the generator output leads 1, 2, 3, and 4 from the circuit breaker and neutral stud (L0).
6. Remove the four controller mount locknuts. See Figure 9-2.
7. Lift the controller from the rubber mounts while guiding the leads through the bottom hole of the controller box.
8. Remove the tie wraps from the wire harness as necessary. Disconnect the F1 connectors from the resistor leads.

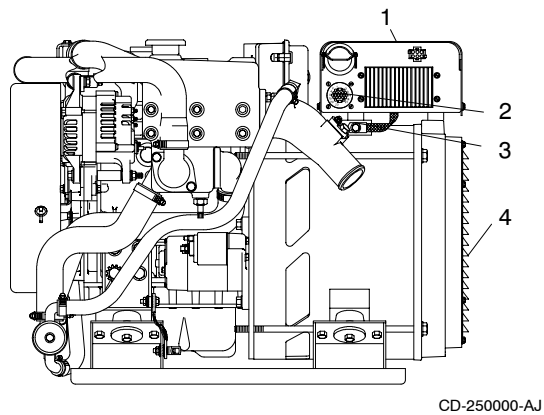

1. Controller cover
2. P4 (22-pin) connector
3. Ground strap
4. Generator end panel

Figure 9-1 Covers

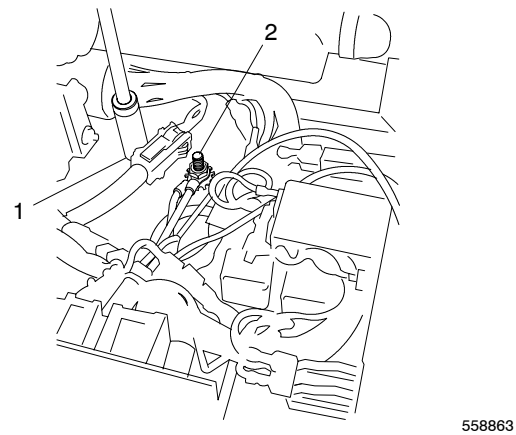

1. Controller mount locknut
2. Neutral stud (L0)

Figure 9-2 Controller Removal

10. Remove the four bolts to remove the exciter field. See Figure 9-3.

11. Remove the three bolts and spacers from the rectifier board.

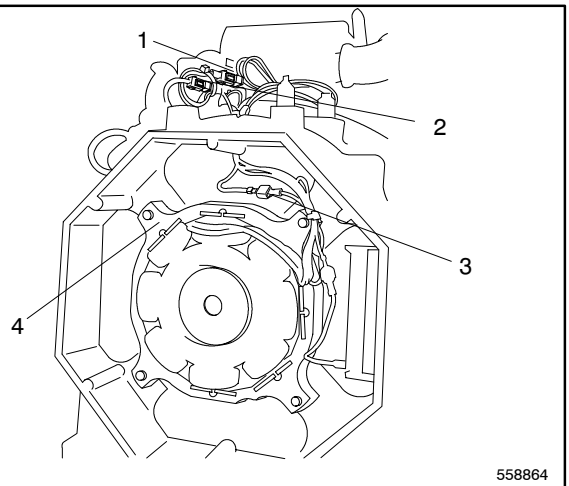

1. P7 connector
2. P6 connector
3. F1 connector
4. Exciter field

Figure 9-3 Exciter Field Removal

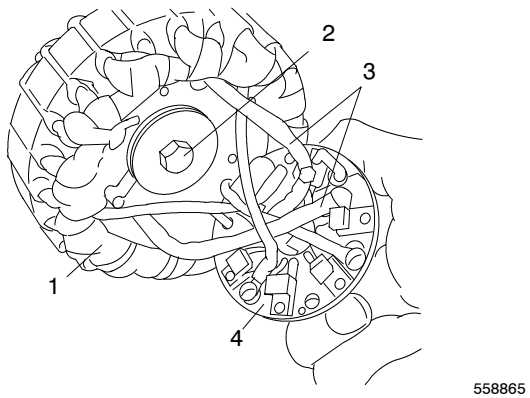

1. Armature
2. Armature retaining bolt
3. Rotor leads
4. Rectifier board

Figure 9-4 Armature Removal

13. Remove the armature from the shaft, guiding rotor leads through the armature bores. See Figure 9-4.

14. Remove the tie wraps and disconnect the P5 (33, 44, 55, B1, and B2) wire connector.

15. Attach the hoist hook to the generator hoisting eye.

    Note: The hoist capacity rating should be one-half ton or greater.

16. Remove the two vibromount bolts. See Figure 9-5.

17. Raise the alternator end and place a wood block under the locator plate. Lower the alternator until the wood block supports the locator plate. See Figure 9-5.

18. Remove the four overbolts from the end bracket. See Figure 9-5.

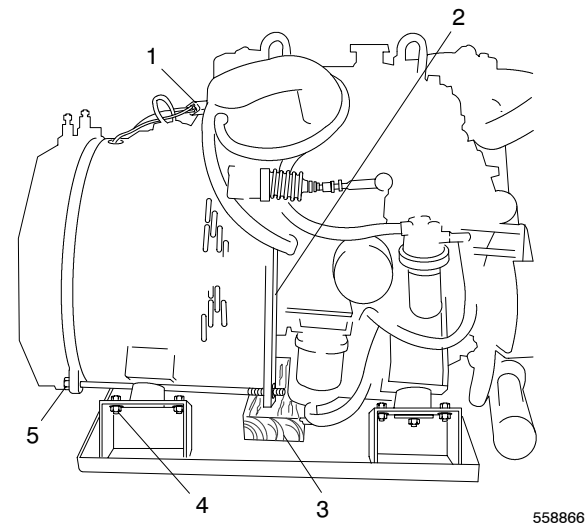

1. P5 connector
2. Backplate
3. Wood block
4. Vibromount bolts
5. Overbolts

Figure 9-5 Supporting the Generator

20. Use a two-jaw puller to pull the end bracket/stator assembly from the bearing on the rotor shaft. See Figure 9-6.

21. Remove the stator assembly from the rotor. Remove or rotate the fan guard, if necessary, to clear the vibromounts.

22. Remove the four locknuts and remove the fan and fan spacer. See Figure 9-7.

23. Remove the six metric bolts to remove the drive disc/rotor assembly from the engine flywheel. See Figure 9-7.

24. Clamp the rotor in a soft-jaw vise. Remove the eight bolts and remove the drive disc assembly from the rotor. See Figure 9-8.

9.2 Reassembly

1. Clamp the rotor in a soft-jaw vise. Install the drive disc on the rotor with disc studs facing the rotor. Tighten the eight bolts to 40 Nm (30 ft. lbs.). See Figure 9-8.

2. Install the rotor/drive disc assembly on the engine flywheel using six washers and bolts. Tighten the bolts to 27 Nm (20 ft. lbs.).

3. Install the fan to the drive disc using four spacers, washers, and locknuts.

   Note: Install the fan with the flange side facing away from the flywheel. Space the studs so that they allow the fan installation in one position only.

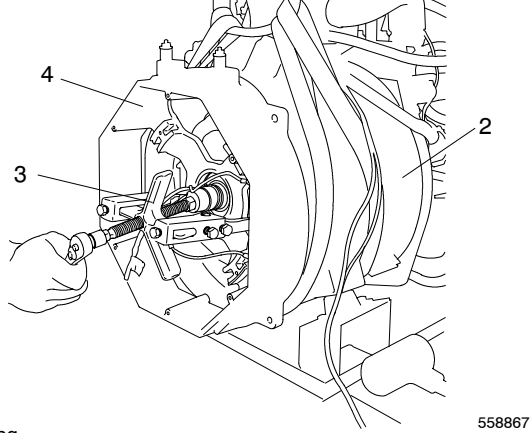

1. Sling
2. Fan guard
3. Two-jaw puller
4. End bracket

Figure 9-6 Stator Assembly Removal

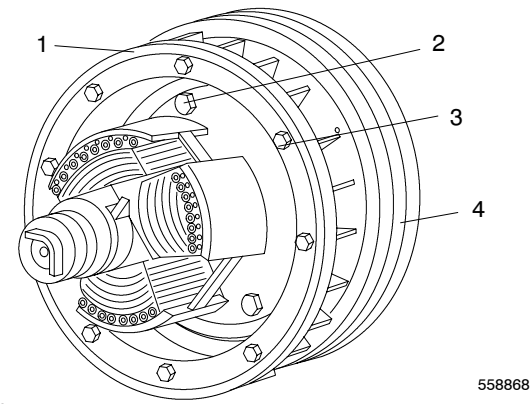

1. Fan
2. Bolt
3. Locknut
4. Rotor assembly

Figure 9-7 Disc/Rotor and Fan Assembly

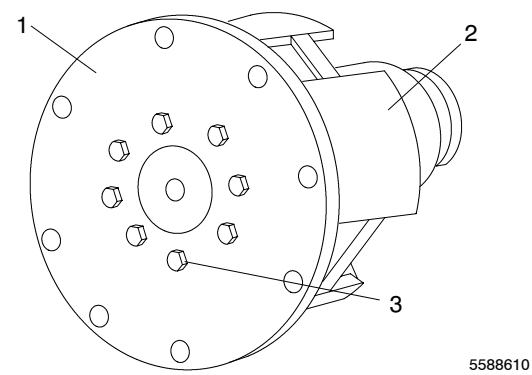

1. Drive disc
2. Rotor
3. Bolt

Figure 9-8 Drive Disc

stator over the rotor. Be careful not to damage the rotor. See Figure 9-9.

5. Install the four overbolts (the two long bolts in the lower holes). Check that the alignment marks on the stator housing and locator plate match. See Figure 9-10. Tighten the overbolts to 40 Nm (30 ft. lbs.).

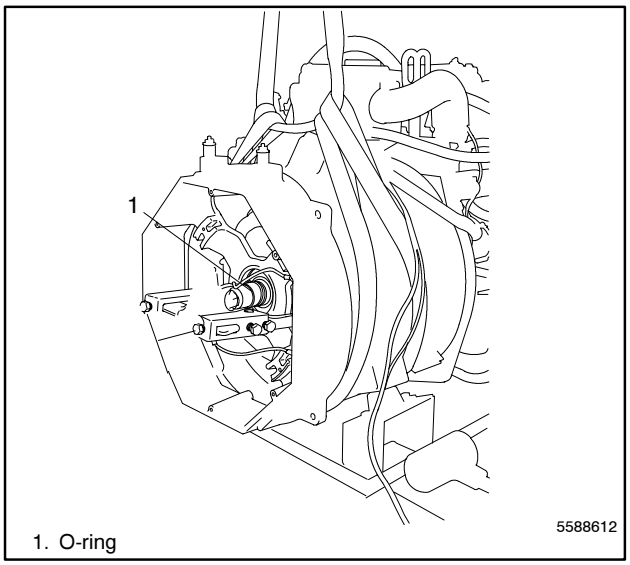

Figure 9-9 Stator Installation

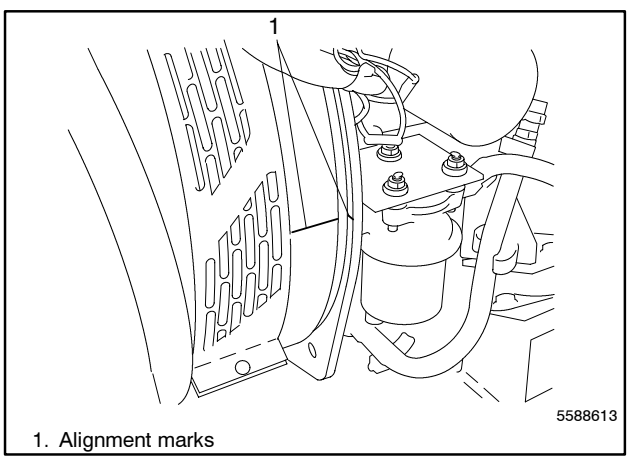

Figure 9-10 Alignment Marks

two small washers, and a locknut in each vibromount. Tighten the mounting bolts to 28 Nm (20 ft. lbs.).

7. Apply antiseize compound to the keyed end of the rotor shaft. Bring the rotor leads through the bores in the armature while installing the armature on the shaft. Check the keyway of the shaft and key of the armature for damage. Install the armature retaining bolt and washer.

8. Use screws and lock washers to install the rotor leads to the rectifier board at the positive (+) and negative (–) terminals.

   Note: Position the lock washers against the rectifier board.

9. Install three spacers and bolts to mount the rectifier board to the armature.

10. Install the exciter field using four bolts and washers. The field leads are at the top. Connect the P6, P7, and F1 connectors. See Figure 9-11.

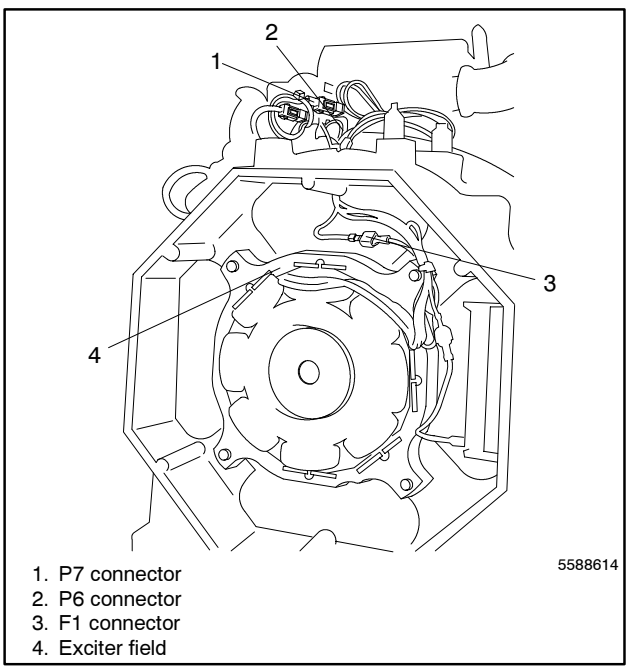

Figure 9-11 Installing Exciter Field

bottom of the controller box. Check that the grommet is intact and there are no sharp edges exposed that could damage the wiring. Install the box on the rubber mounts and install the four locknuts. Connect the leads to the circuit breaker and neutral stud (LO) as marked during disassembly.

Note: Check the generator set's nameplate to verify the original voltage configuration. See Section 10, Voltage Reconnection and Wiring Diagrams, for more information regarding voltage reconnection.

14. Install the controller cover.

15. Install the end panel with the louvered openings down.

16. Reconnect all the external connections—the exhaust line to the mixing elbow, the fuel line to the fuel pump filter inlet, the water line to the seawater pump, the remote start panel to the controller P3 connector, the AC output leads in controller, and the battery cables to the battery (negative (–) lead last).

17. Open the seacock and the fuel valve.

10.1 Voltage Reconnection

The following information illustrates the proper reconnection of 4-lead generator sets. In all cases, follow the National Electrical Code (NEC).

NOTICE

Voltage reconnection. Affix a notice to the generator set after reconnecting the set to a voltage different from the voltage on the nameplate. Order voltage reconnection decal 246242 from an authorized service distributor/dealer.

10.1.1 100–120-Volt Configurations

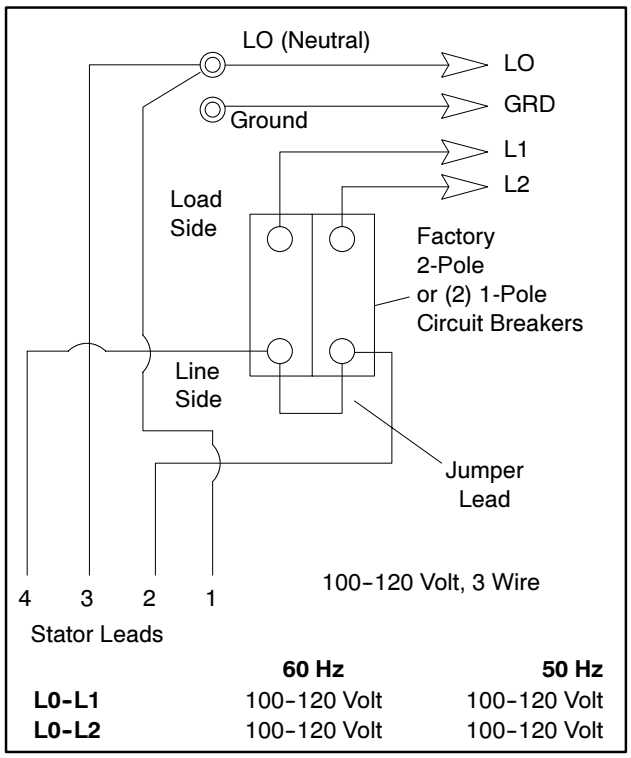

	60 Hz	50 Hz
L0–L1	100–120 Volt	100–120 Volt
L0–L2	100–120 Volt	100–120 Volt

Figure 10-1 100–120 Volt, 3 Wire

Do not connect the load-side terminals of the circuit breaker together when using a factory 2-pole circuit breaker. See Figure 10-1. If the installation requires a 100–120-volt, 2-wire system, use a 1-pole circuit breaker. See Figure 10-2. When connecting stator phase leads together, size the output lead (L1) accordingly. Use a jumper lead on the line side of the circuit breaker to balance the generator set load.

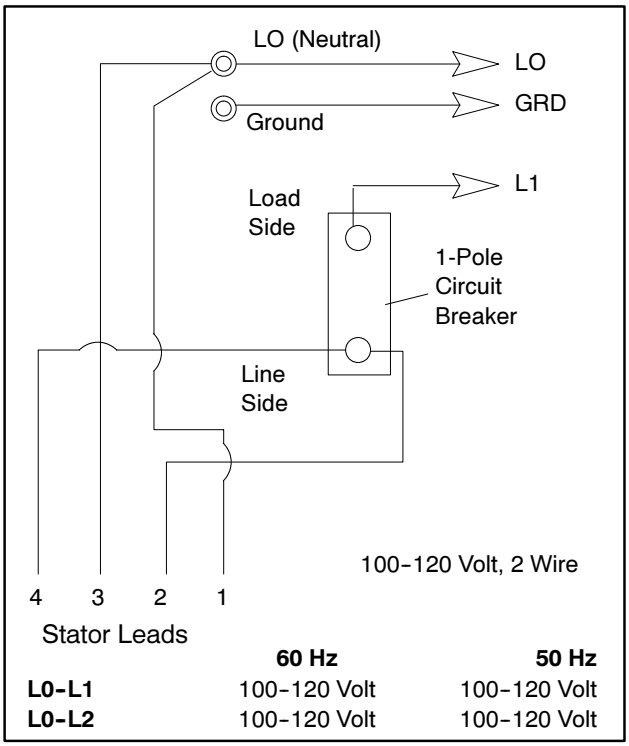

	60 Hz	50 Hz
L0–L1	100–120 Volt	100–120 Volt
L0–L2	100–120 Volt	100–120 Volt

Figure 10-2 100–120 Volt, 2 Wire

This configuration does not use a jumper lead. If the unit was originally wired for straight 100–120 volt, 3 wire, remove the jumper lead (see Figure 10-1 and Figure 10-2 for location). Select a circuit breaker manufactured with a 2-pole circuit breaker. Two 1-pole circuit breakers do not conform to NEC requirements when supplying a 200–240-volt load. This is true even if they are mechanically attached together. Since leads L1 and L2 are different phases, *never* connect them together.

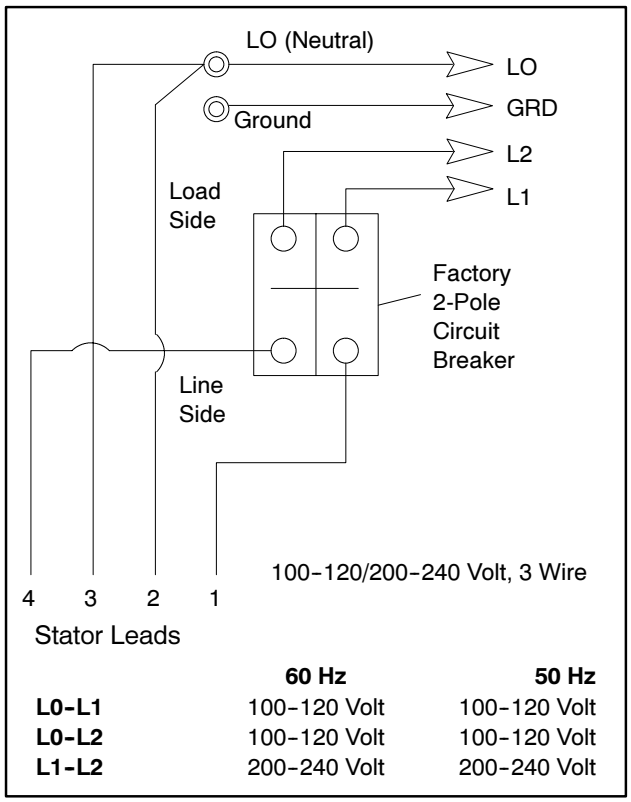

Figure 10-3 100–120/200–240 Volt, 3 Wire

was originally wired for straight 100–200 volt, 3 wire, remove the jumper lead (see Figure 10-1 and Figure 10-2 for location).

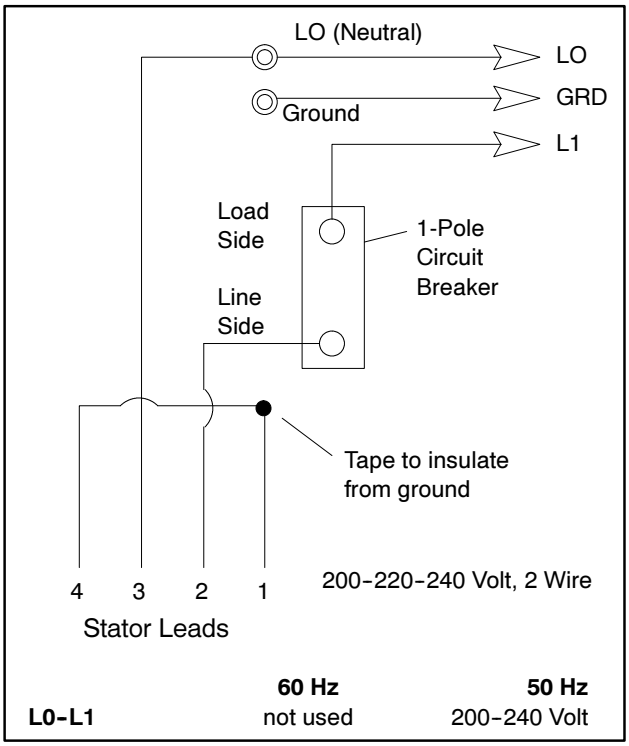

Figure 10-4 200–240 Volt, 2 Wire

Electro Switch

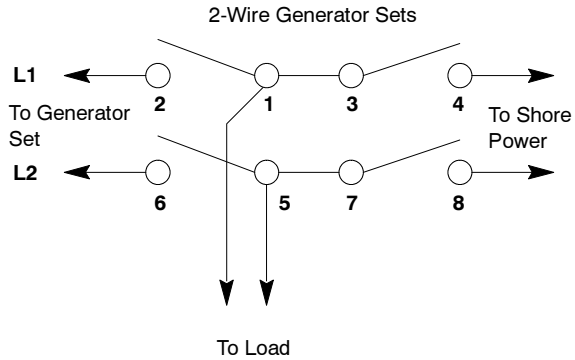

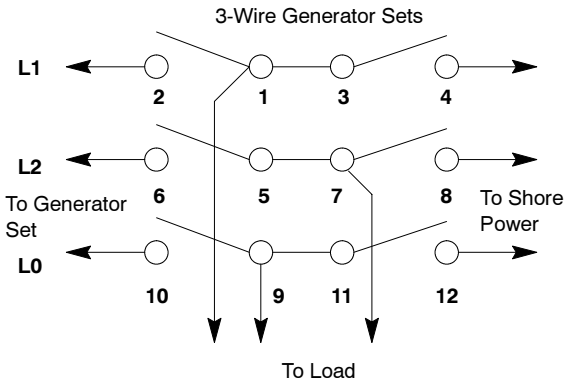

Kraus Naimler/American Solenoid (Early Rectangular Design)

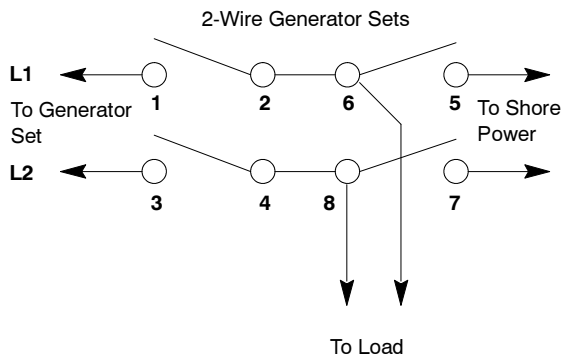

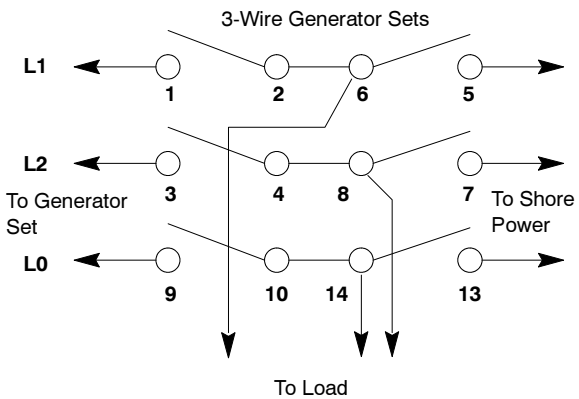

Kraus Naimler/American Solenoid (Newer Round Design)

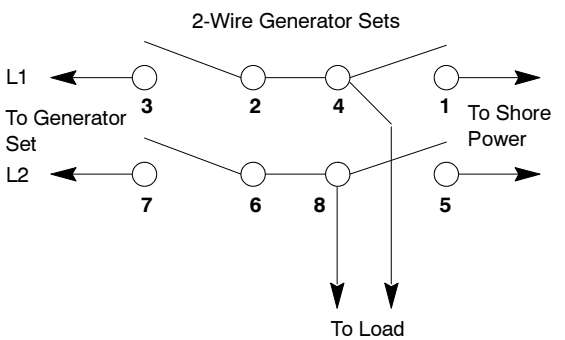

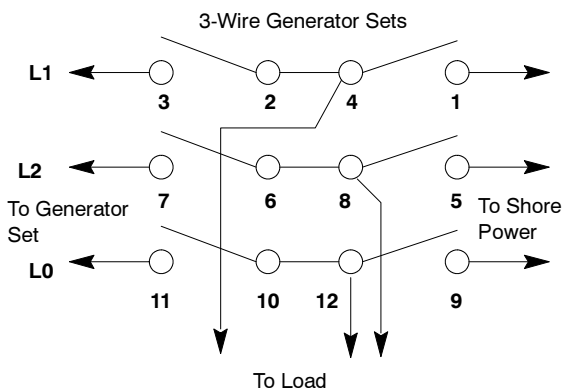

TP-5399-5

SCHEMATIC

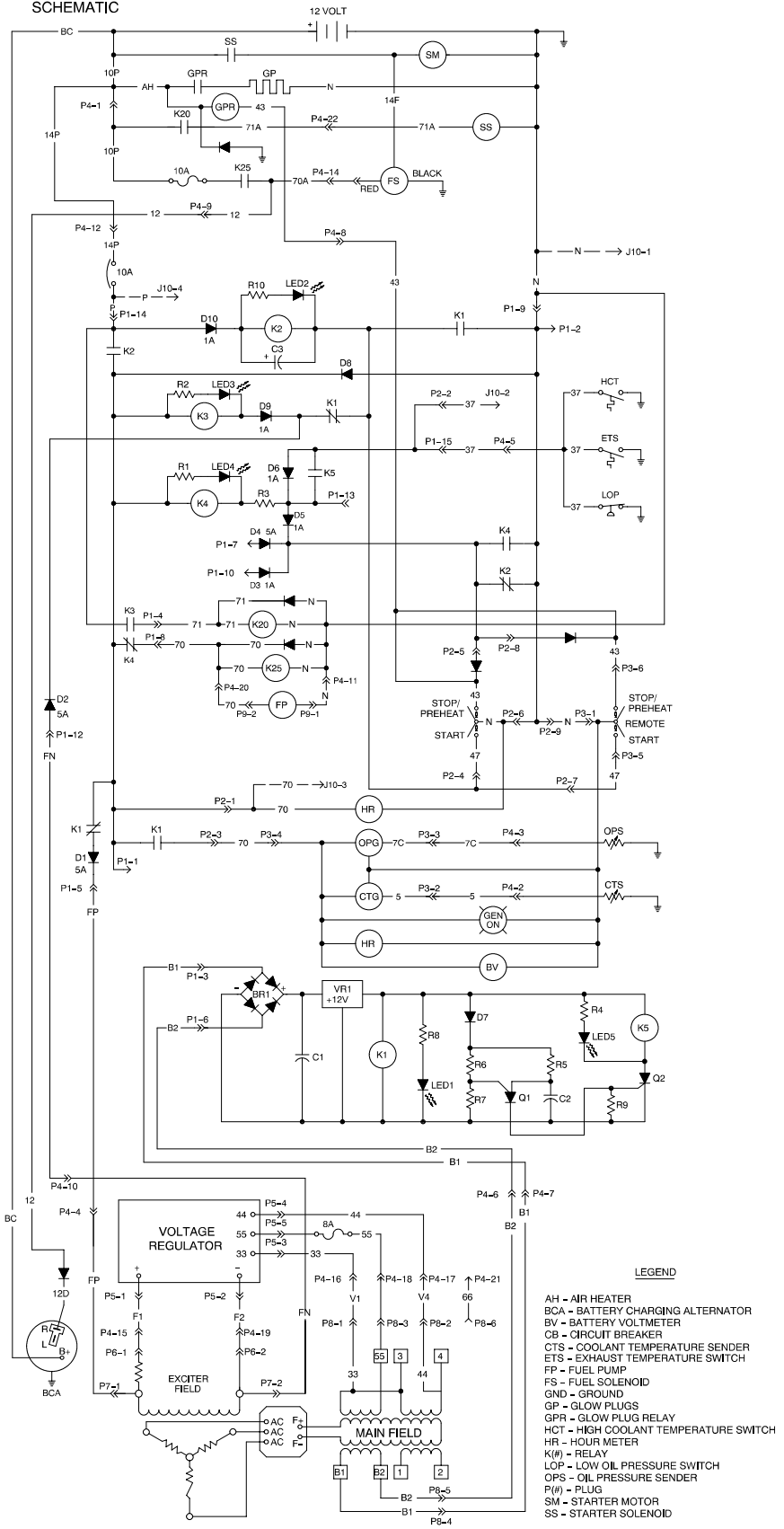
12 VOLT
SM
SS
GPR
GP
K20
K25
FS
BLACK
RED
R10
LED2
D10
K2
C3
K1
D8
R2
LED3
D9
K3
HCT
ETS
LOP
R1
LED4
D6
K5
R3
K4
D5
D4
D3
K20
K25
FP
STOP/ PREHEAT
START
REMOTE
HR
OPG
OPS
CTG
CTS
GEN ON
BV
BR1
VR1 +12V
R8
D7
R4
LED5
R6
R5
LED1
R7
Q1
C2
R9
Q2
C1
VOLTAGE REGULATOR
EXCITER FIELD
MAIN FIELD
BCA
LEGEND
AH - AIR HEATER
BCA - BATTERY CHARGING ALTERNATOR
BV - BATTERY VOLTMETER
CB - CIRCUIT BREAKER
CTS - COOLANT TEMPERATURE SENDER
ETS - EXHAUST TEMPERATURE SWITCH
FP - FUEL PUMP
FS - FUEL SOLENOID
GND - GROUND
GP - GLOW PLUGS
GPR - GLOW PLUG RELAY
HCT - HIGH COOLANT TEMPERATURE SWITCH
HR - HOUR METER
K(#) - RELAY
LOP - LOW OIL PRESSURE SWITCH
OPS - OIL PRESSURE SENDER
P(#) - PLUG
SM - STARTER MOTOR
SS - STARTER SOLENOID
229294-N

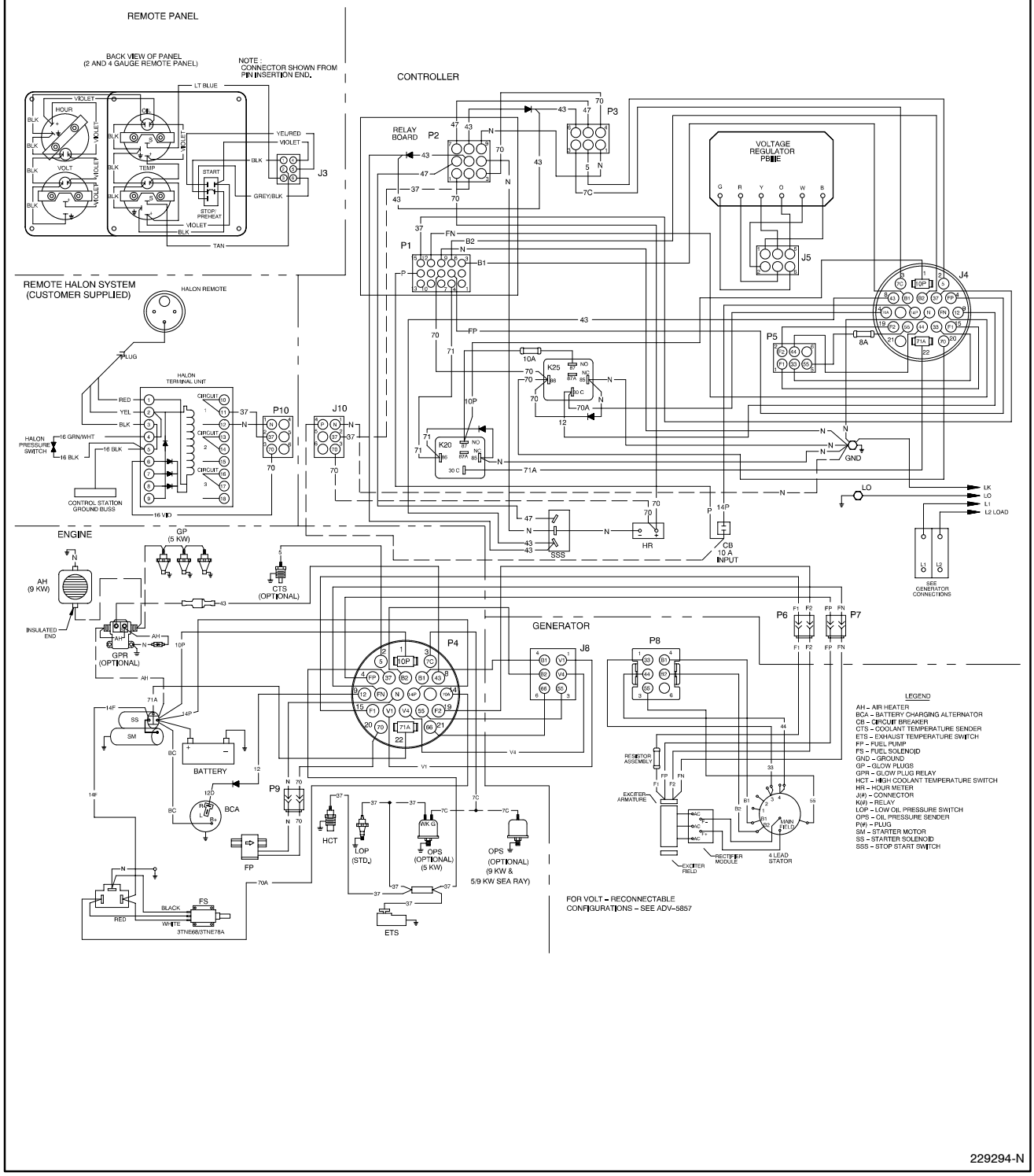
REMOTE PANEL
BACK VIEW OF PANEL
(2 AND 4 GAUGE REMOTE PANEL)
NOTE :
CONNECTOR SHOWN FROM
PIN INSERTION END.
CONTROLLER
RELAY
BOARD
VOLTAGE
REGULATOR
PBIIE
REMOTE HALON SYSTEM
(CUSTOMER SUPPLIED)
HALON REMOTE
HALON
TERMINAL UNIT
HALON
PRESSURE
SWITCH
CONTROL STATION
GROUND BUSS
ENGINE
GP
(5 KW)
AH
(9 KW)
INSULATED
END
GPR
(OPTIONAL)
CTS
(OPTIONAL)
GENERATOR
BATTERY
BCA
FP
HCT
LOP
(STD.)
OPS
(OPTIONAL)
(5 KW)
OPS
(OPTIONAL)
(9 KW &
5/9 KW SEA RAY)
ETS
SSS
HR
CB
10 A
INPUT
SEE
GENERATOR
CONNECTIONS
RESISTOR
ASSEMBLY
EXCITER
ARMATURE
EXCITER
FIELD
RECTIFIER
MODULE
4 LEAD
STATOR
MAIN
FIELD
FS
3TNE68/3TNE78A
FOR VOLT - RECONNECTABLE
CONFIGURATIONS - SEE ADV-5857
LEGEND
AH - AIR HEATER
BCA - BATTERY CHARGING ALTERNATOR
CB - CIRCUIT BREAKER
CTS - COOLANT TEMPERATURE SENDER
ETS - EXHAUST TEMPERATURE SWITCH
FP - FUEL PUMP
FS - FUEL SOLENOID
GND - GROUND
GP - GLOW PLUGS
GPR - GLOW PLUG RELAY
HCT - HIGH COOLANT TEMPERATURE SWITCH
HR - HOUR METER
J(#) - CONNECTOR
K(#) - RELAY
LOP - LOW OIL PRESSURE SWITCH
OPS - OIL PRESSURE SENDER
P(#) - PLUG
SM - STARTER MOTOR
SS - STARTER SOLENOID
SSS - STOP START SWITCH
229294-N

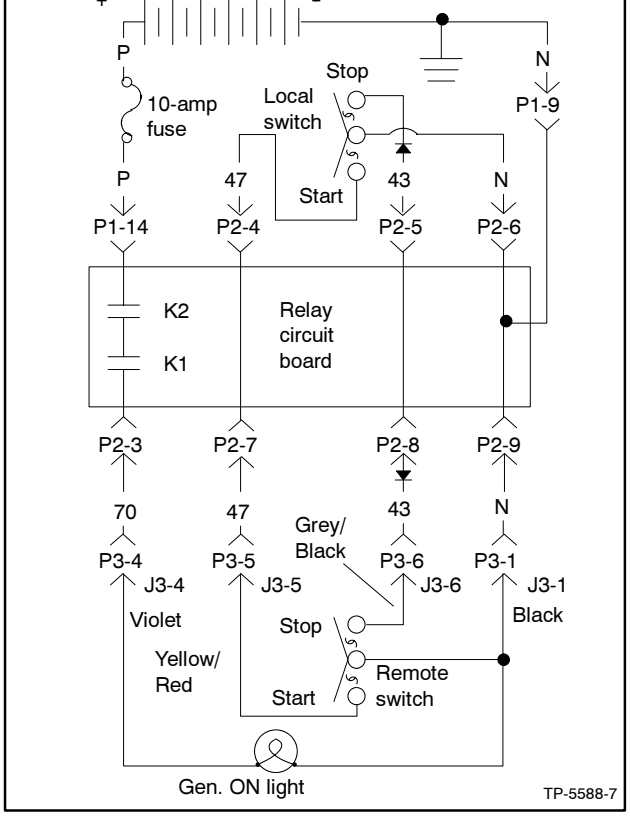
+
-
P
N
10-amp
fuse
Stop
Local
switch
P1-9
P
47
43
N
Start
P1-14
P2-4
P2-5
P2-6
K2
K1
Relay
circuit
board
P2-3
P2-7
P2-8
P2-9
70
47
43
N
Grey/
Black
P3-4
P3-5
P3-6
P3-1
J3-4
J3-5
J3-6
J3-1
Violet
Black
Stop
Yellow/
Red
Remote
switch
Start
Gen. ON light
TP-5588-7

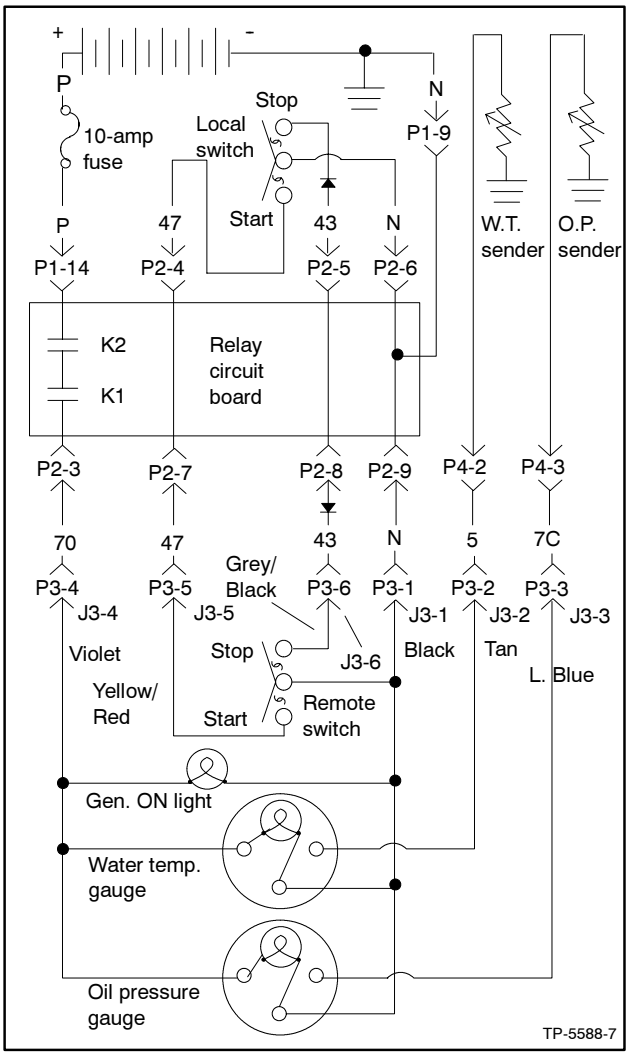
+
-
P
N
10-amp
fuse
Stop
Local
switch
P1-9
W.T.
sender
O.P.
sender
P
47
43
N
Start
P1-14
P2-4
P2-5
P2-6
K2
K1
Relay
circuit
board
P2-3
P2-7
P2-8
P2-9
P4-2
P4-3
70
47
43
N
5
7C
Grey/
Black
P3-4
P3-5
P3-6
P3-1
P3-2
P3-3
J3-4
J3-5
J3-1
J3-2
J3-3
J3-6
Violet
Black
Tan
L. Blue
Stop
Yellow/
Red
Remote
switch
Start
Gen. ON light
Water temp.
gauge
Oil pressure
gauge
TP-5588-7

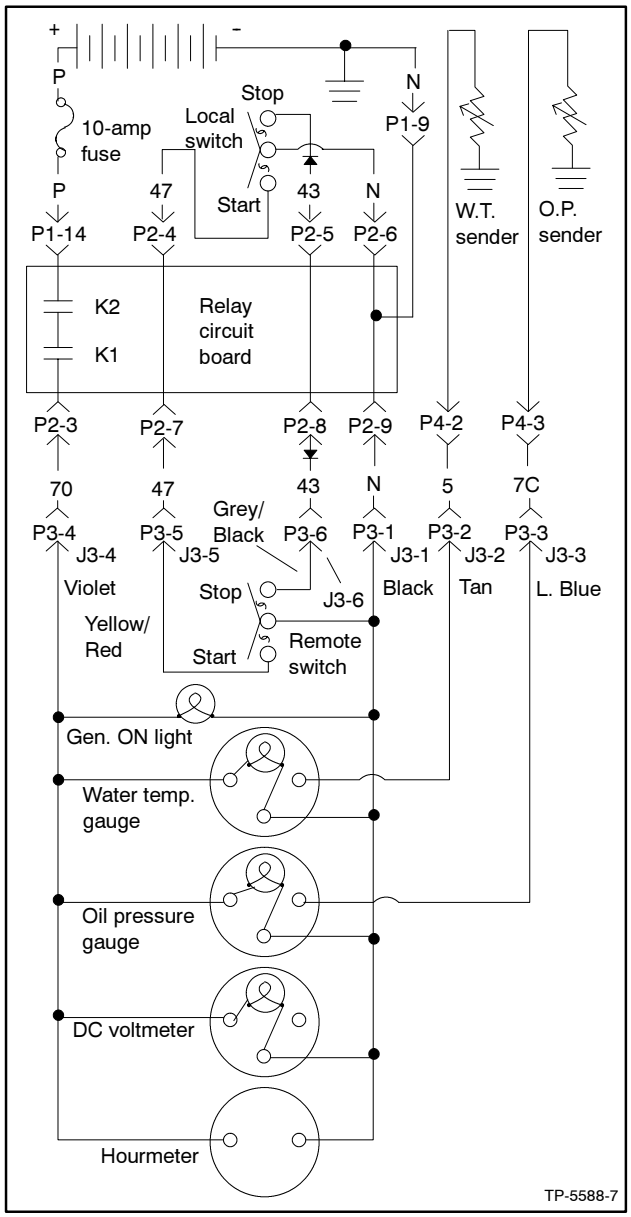
+
-
P
N
10-amp
fuse
Stop
Local
switch
Start
P1-9
P
47
43
N
P1-14
P2-4
P2-5
P2-6
W.T.
sender
O.P.
sender
K2
K1
Relay
circuit
board
P2-3
P2-7
P2-8
P2-9
P4-2
P4-3
70
47
43
N
5
7C
Grey/
Black
P3-4
P3-5
P3-6
P3-1
P3-2
P3-3
J3-4
J3-5
J3-1
J3-2
J3-3
Violet
Stop
J3-6
Black
Tan
L. Blue
Yellow/
Red
Start
Remote
switch
Gen. ON light
Water temp.
gauge
Oil pressure
gauge
DC voltmeter
Hourmeter
TP-5588-7

The following list contains abbreviations that may appear in this publication.

A, amp	ampere
ABDC	after bottom dead center
AC	alternating current
A/D	analog to digital
ADC	analog to digital converter
adj.	adjust, adjustment
ADV	advertising dimensional drawing
AHWT	anticipatory high water temperature
AISI	American Iron and Steel Institute
ALOP	anticipatory low oil pressure
alt.	alternator
Al	aluminum
ANSI	American National Standards Institute (formerly American Standards Association, ASA)
AO	anticipatory only
API	American Petroleum Institute
approx.	approximate, approximately
AR	as required, as requested
AS	as supplied, as stated, as suggested
ASE	American Society of Engineers
ASME	American Society of Mechanical Engineers
assy.	assembly
ASTM	American Society for Testing Materials
ATDC	after top dead center
ATS	automatic transfer switch
auto.	automatic
aux.	auxiliary
A/V	audiovisual
avg.	average
AVR	automatic voltage regulator
AWG	American Wire Gauge
AWM	appliance wiring material
bat.	battery
BBDC	before bottom dead center
BC	battery charger, battery charging
BCA	battery charging alternator
BCI	Battery Council International
BDC	before dead center
BHP	brake horsepower
blk.	black (paint color), block (engine)
blk. htr.	block heater
BMEP	brake mean effective pressure
bps	bits per second
br.	brass
BTDC	before top dead center
Btu	British thermal unit
Btu/min.	British thermal units per minute
C	Celsius, centigrade
cal.	calorie
CARB	California Air Resources Board
CB	circuit breaker
cc	cubic centimeter
CCA	cold cranking amps
ccw.	counterclockwise
CEC	Canadian Electrical Code
cert.	certificate, certification, certified
cfh	cubic feet per hour
cfm	cubic feet per minute
CG	center of gravity
CID	cubic inch displacement
CL	centerline
cm	centimeter
CMOS	complementary metal oxide substrate (semiconductor)
cogen.	cogeneration
com	communications (port)
coml	commercial
Coml/Rec	Commercial/Recreational
conn.	connection
cont.	continued
CPVC	chlorinated polyvinyl chloride
crit.	critical
CRT	cathode ray tube
CSA	Canadian Standards Association
CT	current transformer
Cu	copper
cu. in.	cubic inch
cw.	clockwise
CWC	city water-cooled
cyl.	cylinder
D/A	digital to analog
DAC	digital to analog converter
dB	decibel
dBA	decibel (A weighted)
DC	direct current
DCR	direct current resistance
deg., °	degree
dept.	department
dia.	diameter
DI/EO	dual inlet/end outlet
DIN	Deutsches Institut fur Normung e. V. (also Deutsche Industrie Normenausschuss)
DIP	dual inline package
DPDT	double-pole, double-throw
DPST	double-pole, single-throw
DS	disconnect switch
DVR	digital voltage regulator
E, emer.	emergency (power source)
EDI	electronic data interchange
EFR	emergency frequency relay
e.g.	for example (*exempli gratia)*
EG	electronic governor
EGSA	Electrical Generating Systems Association
EIA	Electronic Industries Association
EI/EO	end inlet/end outlet
EMI	electromagnetic interference
emiss.	emission
eng.	engine
EPA	Environmental Protection Agency
EPS	emergency power system
ER	emergency relay
ES	engineering special, engineered special
ESD	electrostatic discharge
est.	estimated
E-Stop	emergency stop
etc.	et cetera (and so forth)
exh.	exhaust
ext.	external
F	Fahrenheit, female
fglass.	fiberglass
FHM	flat head machine (screw)
fl. oz.	fluid ounce
flex.	flexible
freq.	frequency
FS	full scale
ft.	foot, feet
ft. lb.	foot pounds (torque)
ft./min.	feet per minute
g	gram
ga.	gauge (meters, wire size)
gal.	gallon
gen.	generator
genset	generator set
GFI	ground fault interrupter
GND, ⏚	ground
gov.	governor
gph	gallons per hour
gpm	gallons per minute
gr.	grade, gross
GRD	equipment ground
gr. wt.	gross weight
H x W x D	height by width by depth
HC	hex cap
HCHT	high cylinder head temperature
HD	heavy duty
HET	high exhaust temperature, high engine temperature
hex	hexagon
Hg	mercury (element)
HH	hex head
HHC	hex head cap
HP	horsepower
hr.	hour
HS	heat shrink
hsg.	housing
HVAC	heating, ventilation, and air conditioning
HWT	high water temperature
Hz	hertz (cycles per second)
IC	integrated circuit
ID	inside diameter, identification
IEC	International Electrotechnical Commission
IEEE	Institute of Electrical and Electronics Engineers
IMS	improved motor starting
in.	inch
in. H_2O	inches of water
in. Hg	inches of mercury
in. lb.	inch pounds
Inc.	incorporated
ind.	industrial
int.	internal
int./ext.	internal/external
I/O	input/output
IP	iron pipe
ISO	International Organization for Standardization
J	joule
JIS	Japanese Industry Standard

kg	kilogram
kg/cm^2	kilograms per square centimeter
kgm	kilogram-meter
kg/m^3	kilograms per cubic meter
kHz	kilohertz
kJ	kilojoule
km	kilometer
kOhm, kΩ	kilo-ohm
kPa	kilopascal
kph	kilometers per hour
kV	kilovolt
kVA	kilovolt ampere
kVAR	kilovolt ampere reactive
kW	kilowatt
kWh	kilowatt-hour
kWm	kilowatt mechanical
L	liter
LAN	local area network
L x W x H	length by width by height
lb.	pound, pounds
lbm/ft^3	pounds mass per cubic feet
LCB	line circuit breaker
LCD	liquid crystal display
ld. shd.	load shed
LED	light emitting diode
Lph	liters per hour
Lpm	liters per minute
LOP	low oil pressure
LP	liquefied petroleum
LPG	liquefied petroleum gas
LS	left side
L_{wa}	sound power level, A weighted
LWL	low water level
LWT	low water temperature
m	meter, milli (1/1000)
M	mega (10^6 when used with SI units), male
m^3	cubic meter
m^3/min.	cubic meters per minute
mA	milliampere
man.	manual
max.	maximum
MB	megabyte (2^{20} bytes)
MCM	one thousand circular mils
MCCB	molded-case circuit breaker
meggar	megohmmeter
MHz	megahertz
mi.	mile
mil	one one-thousandth of an inch
min.	minimum, minute
misc.	miscellaneous
MJ	megajoule
mJ	millijoule
mm	millimeter
mOhm, mΩ	milliohm
MOhm, MΩ	megohm
MOV	metal oxide varistor
MPa	megapascal
mpg	miles per gallon
mph	miles per hour
MS	military standard
m/sec.	meters per second
mW	milliwatt
μF	microfarad
N, norm.	normal (power source)
NA	not available, not applicable
nat. gas	natural gas
NBS	National Bureau of Standards
NC	normally closed
NEC	National Electrical Code
NEMA	National Electrical Manufacturers Association
NFPA	National Fire Protection Association
Nm	newton meter
NO	normally open
no., nos.	number, numbers
NPS	National Pipe, Straight
NPSC	National Pipe, Straight-coupling
NPT	National Standard taper pipe thread per general use
NPTF	National Pipe, Taper-Fine
NR	not required, normal relay
ns	nanosecond
OC	overcrank
OD	outside diameter
OEM	original equipment manufacturer
OF	overfrequency
opt.	option, optional
OS	oversize, overspeed
OSHA	Occupational Safety and Health Administration
OV	overvoltage
oz.	ounce
p., pp.	page, pages
PC	personal computer
PCB	printed circuit board
pF	picofarad
PF	power factor
ph., ∅	phase
PHC	Phillips head crimptite (screw)
PHH	Phillips hex head (screw)
PHM	pan head machine (screw)
PLC	programmable logic control
PMG	permanent-magnet generator
pot	potentiometer, potential
ppm	parts per million
PROM	programmable read-only memory
psi	pounds per square inch
pt.	pint
PTC	positive temperature coefficient
PTO	power takeoff
PVC	polyvinyl chloride
qt.	quart, quarts
qty.	quantity
R	replacement (emergency) power source
rad.	radiator, radius
RAM	random access memory
RDO	relay driver output
ref.	reference
rem.	remote
Res/Coml	Residential/Commercial
RFI	radio frequency interference
RH	round head
ROM	read only memory
rot.	rotate, rotating
rpm	revolutions per minute
RS	right side
RTV	room temperature vulcanization
SAE	Society of Automotive Engineers
scfm	standard cubic feet per minute
SCR	silicon controlled rectifier
s, sec.	second
SI	*Systeme international d'unites,* International System of Units
SI/EO	side in/end out
sil.	silencer
SN	serial number
SPDT	single-pole, double-throw
SPST	single-pole, single-throw
spec, specs	specification(s)
sq.	square
sq. cm	square centimeter
sq. in.	square inch
SS	stainless steel
std.	standard
stl.	steel
tach.	tachometer
TD	time delay
TDC	top dead center
TDEC	time delay engine cooldown
TDEN	time delay emergency to normal
TDES	time delay engine start
TDNE	time delay normal to emergency
TDOE	time delay off to emergency
TDON	time delay off to normal
temp.	temperature
term.	terminal
TIF	telephone influence factor
TIR	total indicator reading
tol.	tolerance
turbo.	turbocharger
typ.	typical (same in multiple locations)
UF	underfrequency
UHF	ultrahigh frequency
UL	Underwriter's Laboratories, Inc.
UNC	unified coarse thread (was NC)
UNF	unified fine thread (was NF)
univ.	universal
US	undersize, underspeed
UV	ultraviolet, undervoltage
V	volt
VAC	volts alternating current
VAR	voltampere reactive
VDC	volts direct current
VFD	vacuum fluorescent display
VGA	video graphics adapter
VHF	very high frequency
W	watt
WCR	withstand and closing rating
w/	with
w/o	without
wt.	weight
xfmr	transformer

Use the information below and on the following pages to identify proper fastening techniques when no specific reference for reassembly is made.

Bolt/Screw Length: When bolt/screw length is not given, use Figure 1 as a guide. As a general rule, a minimum length of one thread beyond the nut and a maximum length of 1/2 the bolt/screw diameter beyond the nut is the preferred method.

Washers and Nuts: Use split lock washers as a bolt locking device where specified. Use SAE flat washers with whiz nuts, spiralock nuts, or standard nuts and preloading (torque) of the bolt in all other applications.

See Appendix C, General Torque Specifications, and other torque specifications in the service literature.

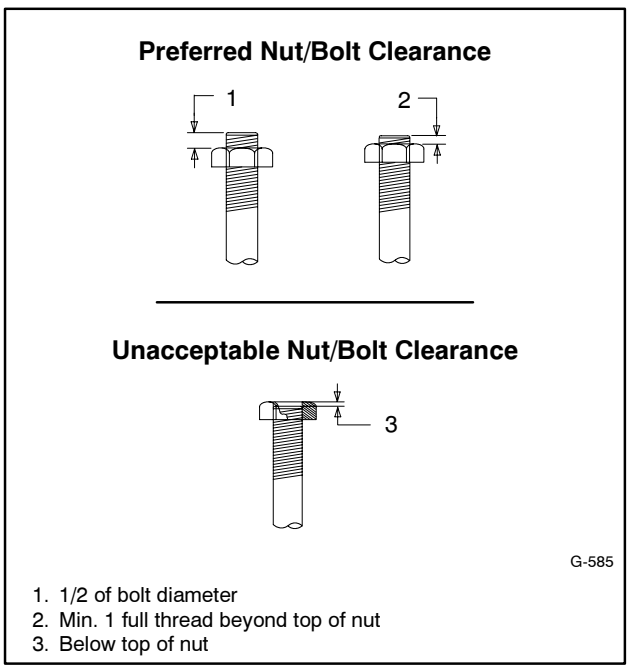

Figure 1 Acceptable Bolt Lengths

Steps for common hardware application:

1. Determine entry hole type: round or slotted.

2. Determine exit hole type: fixed female thread (weld nut), round, or slotted.

   For round and slotted exit holes, determine if hardware is greater than 1/2 inch in diameter, or 1/2 inch in diameter or less. Hardware that is *greater than 1/2 inch* in diameter takes a standard nut and SAE washer. Hardware *1/2 inch or less* in diameter can take a properly torqued whiz nut or spiralock nut. See Figure 2.

3. Follow these SAE washer rules after determining exit hole type:

   a. Always use a washer between hardware and a slot.

   b. Always use a washer under a nut (see 2 above for exception).

   c. Use a washer under a bolt when the female thread is fixed (weld nut).

4. Refer to Figure 2, which depicts the preceding hardware configuration possibilities.

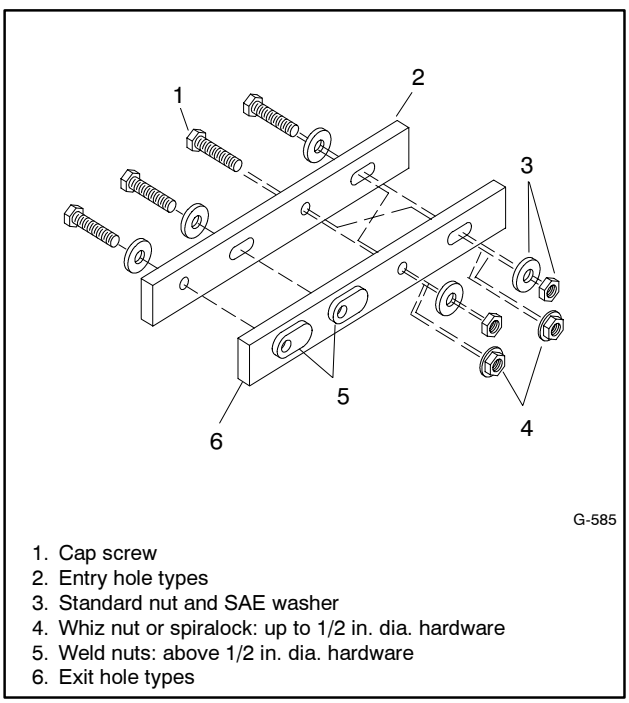

Figure 2 Acceptable Hardware Combinations

Use the following torque specifications when service literature instructions give no specific torque values. The charts list values for new plated, zinc phosphate, or oiled threads. Increase values by 15% for nonplated threads. All torque values are +0%/−10%.

American Standard Fasteners Torque Specifications

Size	Torque Measurement	Assembled into Cast Iron or Steel: Grade 2	Grade 5	Grade 8	Assembled into Aluminum Grade 2 or 5
8-32	Nm (in. lb.)	1.8 (16)	2.3 (20)	—	1.8 (16)
10-24	Nm (in. lb.)	2.9 (26)	3.6 (32)	—	2.9 (26)
10-32	Nm (in. lb.)	2.9 (26)	3.6 (32)	—	2.9 (26)
1/4-20	Nm (in. lb.)	6.8 (60)	10.8 (96)	14.9 (132)	6.8 (60)
1/4-28	Nm (in. lb.)	8.1 (72)	12.2 (108)	16.3 (144)	8.1 (72)
5/16-18	Nm (in. lb.)	13.6 (120)	21.7 (192)	29.8 (264)	13.6 (120)
5/16-24	Nm (in. lb.)	14.9 (132)	23.1 (204)	32.5 (288)	14.9 (132)
3/8-16	Nm (ft. lb.)	24.0 (18)	38.0 (28)	53.0 (39)	24.0 (18)
3/8-24	Nm (ft. lb.)	27.0 (20)	42.0 (31)	60.0 (44)	27.0 (20)
7/16-14	Nm (ft. lb.)	39.0 (29)	60.0 (44)	85.0 (63)	—
7/16-20	Nm (ft. lb.)	43.0 (32)	68.0 (50)	95.0 (70)	—
1/2-13	Nm (ft. lb.)	60.0 (44)	92.0 (68)	130.0 (96)	—
1/2-20	Nm (ft. lb.)	66.0 (49)	103.0 (76)	146.0 (108)	—
9/16-12	Nm (ft. lb.)	81.0 (60)	133.0 (98)	187.0 (138)	—
9/16-18	Nm (ft. lb.)	91.0 (67)	148.0 (109)	209.0 (154)	—
5/8-11	Nm (ft. lb.)	113.0 (83)	183.0 (135)	259.0 (191)	—
5/8-18	Nm (ft. lb.)	128.0 (94)	208.0 (153)	293.0 (216)	—
3/4-10	Nm (ft. lb.)	199.0 (147)	325.0 (240)	458.0 (338)	—
3/4-16	Nm (ft. lb.)	222.0 (164)	363.0 (268)	513.0 (378)	—
1-8	Nm (ft. lb.)	259.0 (191)	721.0 (532)	1109.0 (818)	—
1-12	Nm (ft. lb.)	283.0 (209)	789.0 (582)	1214.0 (895)	—

Metric Fasteners Torque Specifications, Measured in Nm (ft. lb.)

Size (mm)	Assembled into Cast Iron or Steel: Grade 5.8	Grade 8.8	Grade 10.9	Assembled into Aluminum Grade 5.8 or 8.8
M6 x 1.00	5.6 (4)	9.9 (7)	14.0 (10)	5.6 (4)
M8 x 1.25	13.6 (10)	25.0 (18)	35.0 (26)	13.6 (10)
M8 x 1.00	21.0 (16)	25.0 (18)	35.0 (26)	21.0 (16)
M10 x 1.50	27.0 (20)	49.0 (35)	68.0 (50)	27.0 (20)
M10 x 1.25	39.0 (29)	49.0 (35)	68.0 (50)	39.0 (29)
M12 x 1.75	47.0 (35)	83.0 (61)	117.0 (86)	—
M12 x 1.50	65.0 (48)	88.0 (65)	125.0 (92)	—
M14 x 2.00	74.0 (55)	132.0 (97)	185.0 (136)	—
M14 x 1.50	100.0 (74)	140.0 (103)	192.0 (142)	—
M16 x 2.00	115.0 (85)	200.0 (148)	285.0 (210)	—
M16 x 1.50	141.0 (104)	210.0 (155)	295.0 (218)	—
M18 x 2.50	155.0 (114)	275.0 (203)	390.0 (288)	—
M18 x 1.50	196.0 (145)	305.0 (225)	425.0 (315)	—

Screw/Bolts/Studs	
Head Styles	
Hex Head or Machine Head	
Hex Head or Machine Head with Washer	
Flat Head (FHM)	
Round Head (RHM)	
Pan Head	
Hex Socket Head Cap or Allen™ Head Cap	
Hex Socket Head or Allen™ Head Shoulder Bolt	
Sheet Metal Screw	
Stud	
Drive Styles	
Hex	
Hex and Slotted	
Phillips®	
Slotted	
Hex Socket	

Nuts	
Nut Styles	
Hex Head	
Lock or Elastic	
Square	
Cap or Acorn	
Wing	
Washers	
Washer Styles	
Plain	
Split Lock or Spring	
Spring or Wave	
External Tooth Lock	
Internal Tooth Lock	
Internal-External Tooth Lock	

Hardness Grades	
American Standard	
Grade 2	
Grade 5	
Grade 8	
Grade 8/9 (Hex Socket Head)	
Metric	
Number stamped on hardware; 5.8 shown	5.8

Allen™ head screw is a trademark of Holo-Krome Co.

Phillips® screw is a registered trademark of Phillips Screw Company.

Sample Dimensions

American Standard (Screws, Bolts, Studs, and Nuts)

1/4-20 x 1

- 1 — Length In Inches (Screws and Bolts)
- 20 — Threads Per Inch
- 1/4 — Major Thread Diameter In Fractional Inches Or Screw Number Size

Metric (Screws, Bolts, Studs, and Nuts)

M8-1.25 x 20

- 20 — Length In Millimeters (Screws and Bolts)
- 1.25 — Distance Between Threads In Millimeters
- M8 — Major Thread Diameter In Millimeters

Plain Washers

9/32 x 5/8 x 1/16

- 1/16 — Thickness
- 5/8 — External Dimension
- 9/32 — Internal Dimension

Lock Washers

5/8

- 5/8 — Internal Dimension

The Common Hardware List lists part numbers and dimensions for common hardware items.

American Standard

Hex Head Bolts (Grade 5)

Part No.	Dimensions
X-465-17	1/4-20 x .38
X-465-6	1/4-20 x .50
X-465-2	1/4-20 x .62
X-465-16	1/4-20 x .75
X-465-18	1/4-20 x .88
X-465-7	1/4-20 x 1.00
X-465-8	1/4-20 x 1.25
X-465-9	1/4-20 x 1.50
X-465-10	1/4-20 x 1.75
X-465-11	1/4-20 x 2.00
X-465-12	1/4-20 x 2.25
X-465-14	1/4-20 x 2.75
X-465-21	1/4-20 x 5.00
X-465-25	1/4-28 x .38
X-465-20	1/4-28 x 1.00
X-125-33	5/16-18 x .50
X-125-23	5/16-18 x .62
X-125-3	5/16-18 x .75
X-125-31	5/16-18 x .88
X-125-5	5/16-18 x 1.00
X-125-24	5/16-18 x 1.25
X-125-34	5/16-18 x 1.50
X-125-25	5/16-18 x 1.75
X-125-26	5/16-18 x 2.00
230578	5/16-18 x 2.25
X-125-29	5/16-18 x 2.50
X-125-27	5/16-18 x 2.75
X-125-28	5/16-18 x 3.00
X-125-22	5/16-18 x 4.50
X-125-32	5/16-18 x 5.00
X-125-35	5/16-18 x 5.50
X-125-36	5/16-18 x 6.00
X-125-40	5/16-18 x 6.50
X-125-43	5/16-24 x 1.75
X-125-44	5/16-24 x 2.50
X-125-30	5/16-24 x .75
X-125-39	5/16-24 x 2.00
X-125-38	5/16-24 x 2.75
X-6238-2	3/8-16 x .62
X-6238-10	3/8-16 x .75
X-6238-3	3/8-16 x .88
X-6238-11	3/8-16 x 1.00
X-6238-4	3/8-16 x 1.25
X-6238-5	3/8-16 x 1.50
X-6238-1	3/8-16 x 1.75
X-6238-6	3/8-16 x 2.00
X-6238-17	3/8-16 x 2.25
X-6238-7	3/8-16 x 2.50
X-6238-8	3/8-16 x 2.75
X-6238-9	3/8-16 x 3.00
X-6238-19	3/8-16 x 3.25
X-6238-12	3/8-16 x 3.50
X-6238-20	3/8-16 x 3.75
X-6238-13	3/8-16 x 4.50
X-6238-18	3/8-16 x 5.50
X-6238-25	3/8-16 x 6.50

Hex Head Bolts, cont.

Part No.	Dimensions
X-6238-14	3/8-24 x .75
X-6238-16	3/8-24 x 1.25
X-6238-21	3/8-24 x 4.00
X-6238-22	3/8-24 x 4.50
X-6024-5	7/16-14 x .75
X-6024-2	7/16-14 x 1.00
X-6024-8	7/16-14 x 1.25
X-6024-3	7/16-14 x 1.50
X-6024-4	7/16-14 x 2.00
X-6024-11	7/16-14 x 2.75
X-6024-12	7/16-14 x 6.50
X-129-15	1/2-13 x .75
X-129-17	1/2-13 x 1.00
X-129-18	1/2-13 x 1.25
X-129-19	1/2-13 x 1.50
X-129-20	1/2-13 x 1.75
X-129-21	1/2-13 x 2.00
X-129-22	1/2-13 x 2.25
X-129-23	1/2-13 x 2.50
X-129-24	1/2-13 x 2.75
X-129-25	1/2-13 x 3.00
X-129-27	1/2-13 x 3.50
X-129-29	1/2-13 x 4.00
X-129-30	1/2-13 x 4.50
X-463-9	1/2-13 x 5.50
X-129-44	1/2-13 x 6.00
X-129-51	1/2-20 x .75
X-129-45	1/2-20 x 1.25
X-129-52	1/2-20 x 1.50
X-6021-3	5/8-11 x 1.00
X-6021-4	5/8-11 x 1.25
X-6021-2	5/8-11 x 1.50
X-6021-1	5/8-11 x 1.75
273049	5/8-11 x 2.00
X-6021-5	5/8-11 x 2.25
X-6021-6	5/8-11 x 2.50
X-6021-7	5/8-11 x 2.75
X-6021-12	5/8-11 x 3.75
X-6021-11	5/8-11 x 4.50
X-6021-10	5/8-11 x 6.00
X-6021-9	5/8-18 x 2.50
X-6239-1	3/4-10 x 1.00
X-6239-8	3/4-10 x 1.25
X-6239-2	3/4-10 x 1.50
X-6239-3	3/4-10 x 2.00
X-6239-4	3/4-10 x 2.50
X-6239-5	3/4-10 x 3.00
X-6239-6	3/4-10 x 3.50
X-792-1	1-8 x 2.25
X-792-5	1-8 x 3.00
X-792-8	1-8 x 5.00

Hex Nuts

Part No.	Dimensions	Type
X-6009-1	1-8	Standard
X-6210-3	6-32	Whiz
X-6210-4	8-32	Whiz
X-6210-5	10-24	Whiz
X-6210-1	10-32	Whiz
X-6210-2	1/4-20	Spiralock
X-6210-6	1/4-28	Spiralock
X-6210-7	5/16-18	Spiralock
X-6210-8	5/16-24	Spiralock
X-6210-9	3/8-16	Spiralock
X-6210-10	3/8-24	Spiralock
X-6210-11	7/16-14	Spiralock
X-6210-12	1/2-13	Spiralock
X-6210-15	7/16-20	Spiralock
X-6210-14	1/2-20	Spiralock
X-85-3	5/8-11	Standard
X-88-12	3/4-10	Standard
X-89-2	1/2-20	Standard

Washers

Part No.	ID	OD	Thick.	Bolt/ Screw
X-25-46	.125	.250	.022	#4
X-25-9	.156	.375	.049	#6
X-25-48	.188	.438	.049	#8
X-25-36	.219	.500	.049	#10
X-25-40	.281	.625	.065	1/4
X-25-85	.344	.687	.065	5/16
X-25-37	.406	.812	.065	3/8
X-25-34	.469	.922	.065	7/16
X-25-26	.531	1.062	.095	1/2
X-25-15	.656	1.312	.095	5/8
X-25-29	.812	1.469	.134	3/4
X-25-127	1.062	2.000	.134	1

Part No.	Dimensions
Hex Head Bolts (Partial Thread)	
M931-05055-60	M5-0.80 x 55
M931-06040-60	M6-1.00 x 40
M931-06055-60	M6-1.00 x 55
M931-06060-60	M6-1.00 x 60
M931-06060-SS	M6-1.00 x 60
M931-06070-60	M6-1.00 x 70
M931-06070-SS	M6-1.00 x 70
M931-06075-60	M6-1.00 x 75
M931-06090-60	M6-1.00 x 90
M931-06145-60	M6-1.00 x 145
M931-06150-60	M6-1.00 x 150
M931-08035-60	M8-1.25 x 35
M931-08040-60	M8-1.25 x 40
M931-08045-60	M8-1.25 x 45
M931-08050-60	M8-1.25 x 50
M931-08055-60	M8-1.25 x 55
M931-08055-82	M8-1.25 x 55*
M931-08060-60	M8-1.25 x 60
M931-08070-60	M8-1.25 x 70
M931-08070-82	M8-1.25 x 70*
M931-08075-60	M8-1.25 x 75
M931-08080-60	M8-1.25 x 80
M931-08090-60	M8-1.25 x 90
M931-08095-60	M8-1.25 x 95
M931-08100-60	M8-1.25 x 100
M931-08110-60	M8-1.25 x 110
M931-08120-60	M8-1.25 x 120
M931-08130-60	M8-1.25 x 130
M931-08140-60	M8-1.25 x 140
M931-08150-60	M8-1.25 x 150
M931-08200-60	M8-1.25 x 200
M931-10040-82	M10-1.25 x 40*
M931-10040-60	M10-1.50 x 40
M931-10045-60	M10-1.50 x 45
M931-10050-60	M10-1.50 x 50
M931-10050-82	M10-1.25 x 50*
M931-10055-60	M10-1.50 x 55
M931-10060-60	M10-1.50 x 60
M931-10065-60	M10-1.50 x 65
M931-10070-60	M10-1.50 x 70
M931-10080-60	M10-1.50 x 80
M931-10080-82	M10-1.25 x 80*
M931-10090-60	M10-1.50 x 90
M931-10090-82	M10-1.50 x 90*
M931-10100-60	M10-1.50 x 100
M931-10110-60	M10-1.50 x 110
M931-10120-60	M10-1.50 x 120
M931-10130-60	M10-1.50 x 130
M931-10140-60	M10-1.50 x 140
M931-10180-60	M10-1.50 x 180
M931-10235-60	M10-1.50 x 235
M931-10260-60	M10-1.50 x 260
M960-10330-60	M10-1.25 x 330
M931-12045-60	M12-1.75 x 45
M960-12050-60	M12-1.25 x 50
M960-12050-82	M12-1.25 x 50*
M931-12050-60	M12-1.75 x 50
M931-12050-82	M12-1.75 x 50*
M931-12055-60	M12-1.75 x 55
M931-12060-60	M12-1.75 x 60
M931-12060-82	M12-1.75 x 60*
M931-12065-60	M12-1.75 x 65
M931-12075-60	M12-1.75 x 75
M931-12080-60	M12-1.75 x 80
M931-12090-60	M12-1.75 x 90
M931-12100-60	M12-1.75 x 100
M931-12110-60	M12-1.75 x 110

Part No.	Dimensions
Hex Head Bolts (Partial Thread), continued	
M960-16090-60	M16-1.50 x 90
M931-16090-60	M16-2.00 x 90
M931-16100-60	M16-2.00 x 100
M931-16100-82	M16-2.00 x 100*
M931-16120-60	M16-2.00 x 120
M931-16150-60	M16-2.00 x 150
M931-20065-60	M20-2.50 x 65
M931-20090-60	M20-2.50 x 90
M931-20100-60	M20-2.50 x 100
M931-20120-60	M20-2.50 x 120
M931-20140-60	M20-2.50 x 140
M931-20160-60	M20-2.50 x 160
M931-22090-60	M22-2.50 x 90
M931-22120-60	M22-2.50 x 120
M931-22160-60	M22-2.50 x 160
M931-24090-60	M24-3.00 x 90
M931-24120-60	M24-3.00 x 120
M931-24160-60	M24-3.00 x 160
M931-24200-60	M24-3.00 x 200
Hex Head Bolts (Full Thread)	
M933-04006-60	M4-0.70 x 6
M933-05030-60	M5-0.80 x 30
M933-05035-60	M5-0.80 x 35
M933-05050-60	M5-0.80 x 50
M933-06010-60	M6-1.00 x 10
M933-06012-60	M6-1.00 x 12
M933-06014-60	M6-1.00 x 14
M933-06016-60	M6-1.00 x 16
M933-06020-60	M6-1.00 x 20
M933-06025-60	M6-1.00 x 25
M933-06030-60	M6-1.00 x 30
M933-06040-60	M6-1.00 x 40
M933-06050-60	M6-1.00 x 50
M933-07025-60	M7-1.00 x 25
M933-08010-60	M8-1.25 x 10
M933-08012-60	M8-1.25 x 12
M933-08016-60	M8-1.25 x 16
M933-08020-60	M8-1.25 x 20
M933-08025-60	M8-1.25 x 25
M933-08030-60	M8-1.25 x 30
M933-08030-82	M8-1.25 x 30*
M933-10012-60	M10-1.50 x 12
M961-10020-60	M10-1.25 x 20
M933-10020-60	M10-1.50 x 20
M933-10025-60	M10-1.50 x 25
M961-10025-60	M10-1.25 x 25
M933-10025-82	M10-1.50 x 25*
M961-10030-60	M10-1.25 x 30
M933-10030-60	M10-1.50 x 30
M933-10030-82	M10-1.50 x 30*
M961-10035-60	M10-1.25 x 35
M933-10035-60	M10-1.50 x 35
M933-10035-82	M10-1.50 x 35*
M961-10040-60	M10-1.25 x 40

Part No.	Dimensions
Hex Head Bolts (Full Thread), continued	
M933-12016-60	M12-1.75 x 16
M933-12020-60	M12-1.75 x 20
M961-12020-60F	M12-1.50 x 20
M933-12025-60	M12-1.75 x 25
M933-12025-82	M12-1.75 x 25*
M961-12030-60	M12-1.25 x 30
M933-12030-82	M12-1.75 x 30*
M961-12030-82F	M12-1.50 x 30*
M933-12030-60	M12-1.75 x 30
M933-12035-60	M12-1.75 x 35
M961-12040-82	M12-1.25 x 40*
M933-12040-60	M12-1.75 x 40
M933-12040-82	M12-1.75 x 40*
M961-14025-60	M14-1.50 x 25
M933-14025-60	M14-2.00 x 25
M961-14050-82	M14-1.50 x 50*
M961-16025-60	M16-1.50 x 25
M933-16025-60	M16-2.00 x 25
M961-16030-82	M16-1.50 x 30*
M933-16030-82	M16-2.00 x 30*
M933-16035-60	M16-2.00 x 35
M961-16040-60	M16-1.50 x 40
M933-16040-60	M16-2.00 x 40
M961-16045-82	M16-1.50 x 45*
M933-16045-82	M16-2.00 x 45*
M933-16050-60	M16-2.00 x 50
M933-16050-82	M16-2.00 x 50*
M933-16060-60	M16-2.00 x 60
M933-16070-60	M16-2.00 x 70
M933-18035-60	M18-2.50 x 35
M933-18050-60	M18-2.50 x 50
M933-18060-60	M18-2.50 x 60
M933-20050-60	M20-2.50 x 50
M933-20055-60	M20-2.50 x 55
M933-24060-60	M24-3.00 x 60
M933-24065-60	M24-3.00 x 65
M933-24070-60	M24-3.00 x 70
Pan Head Machine Screws	
M7985A-03010-20	M3-0.50 x 10
M7985A-03012-20	M3-0.50 x 12
M7985A-04010-20	M4-0.70 x 10
M7985A-04016-20	M4-0.70 x 16
M7985A-04020-20	M4-0.70 x 20
M7985A-04050-20	M4-0.70 x 50
M7985A-04100-20	M4-0.70 x 100
M7985A-05010-20	M5-0.80 x 10
M7985A-05012-20	M5-0.80 x 12
M7985A-05016-20	M5-0.80 x 16
M7985A-05020-20	M5-0.80 x 20
M7985A-05025-20	M5-0.80 x 25
M7985A-05030-20	M5-0.80 x 30
M7985A-05080-20	M5-0.80 x 80
M7985A-05100-20	M5-0.80 x 100
M7985A-06100-20	M6-1.00 x 100
Flat Head Machine Screws	
M965A-04012-SS	M4-0.70 x 12
M965A-05012-SS	M5-0.80 x 12
M965A-05016-20	M5-0.80 x 16
M965A-06012-20	M6-1.00 x 12

* This metric hex bolt's hardness is grade 10.9.

Hex Nuts

M934-03-50	M3-0.50	Standard
M934-04-50	M4-0.70	Standard
M934-04-B	M4-0.70	Brass
M934-05-50	M5-0.80	Standard
M934-06-60	M6-1.00	Standard
M934-06-64	M6-1.00	Std. (green)
M6923-06-80	M6-1.00	Spiralock
M982-06-80	M6-1.00	Elastic Stop
M934-08-60	M8-1.25	Standard
M6923-08-80	M8-1.25	Spiralock
M982-08-80	M8-1.25	Elastic Stop
M934-10-60	M10-1.50	Standard
M934-10-60F	M10-1.25	Standard
M6923-10-80	M10-1.50	Spiralock
M6923-10-62	M10-1.50	Spiralock†
M982-10-80	M10-1.50	Elastic Stop
M934-12-60	M12-1.75	Standard
M934-12-60F	M12-1.25	Standard
M6923-12-80	M12-1.75	Spiralock
M982-12-80	M12-1.75	Elastic Stop
M982-14-60	M14-2.00	Elastic Stop
M6923-16-80	M16-2.00	Spiralock
M982-16-80	M16-2.00	Elastic Stop
M934-18-80	M18-2.5	Standard
M982-18-60	M18-2.50	Elastic Stop
M934-20-80	M20-2.50	Standard
M982-20-80	M20-2.50	Elastic Stop
M934-22-60	M22-2.50	Standard
M934-24-80	M24-3.00	Standard
M982-24-60	M24-3.00	Elastic Stop
M934-30-80	M30-3.50	Standard

Washers

Part No.	ID	OD	Thick.	Bolt/ Screw
M125A-03-80	3.2	7.0	0.5	M3
M125A-04-80	4.3	9.0	0.8	M4
M125A-05-80	5.3	10.0	1.0	M5
M125A-06-80	6.4	12.0	1.6	M6
M125A-08-80	8.4	16.0	1.6	M8
M125A-10-80	10.5	20.0	2.0	M10
M125A-12-80	13.0	24.0	2.5	M12
M125A-14-80	15.0	28.0	2.5	M14
M125A-16-80	17.0	30.0	3.0	M16
M125A-18-80	19.0	34.0	3.0	M18
M125A-20-80	21.0	37.0	3.0	M20
M125A-24-80	25.0	44.0	4.0	M24

† This metric hex nut's hardness is grade 8.

KOHLER®
POWER SYSTEMS

KOHLER CO. Kohler, Wisconsin 53044
Phone 920-565-3381, Fax 920-459-1646
For the nearest sales/service outlet in the
US and Canada, phone 1-800-544-2444
KohlerPowerSystems.com

Kohler Power Systems
Asia Pacific Headquarters
7 Jurong Pier Road
Singapore 619159
Phone (65)6264-6422, Fax (65)6264-6455

TP-6053 7/04a

© 2000 and 2004 by Kohler Co. All rights reserved.